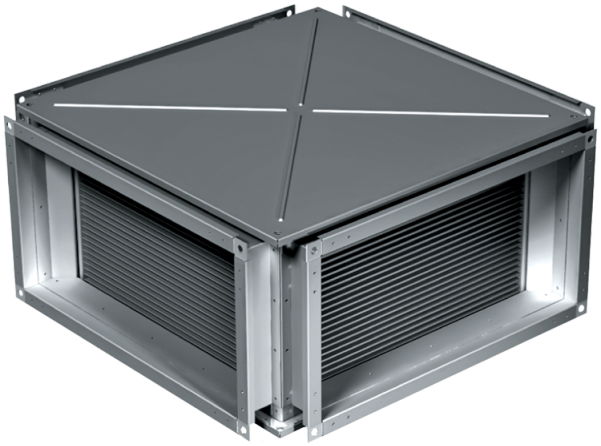

KWT 80x50

Plate heat exchangers for rectangular ducts

- Casing material: Galvanized steel

	Unit of measurement	KWT 80x50
Weight	kg	61.1

Dimensions

B	B1	B2	H	H1	H2	H3	L
800	820	840	500	520	540	575	930

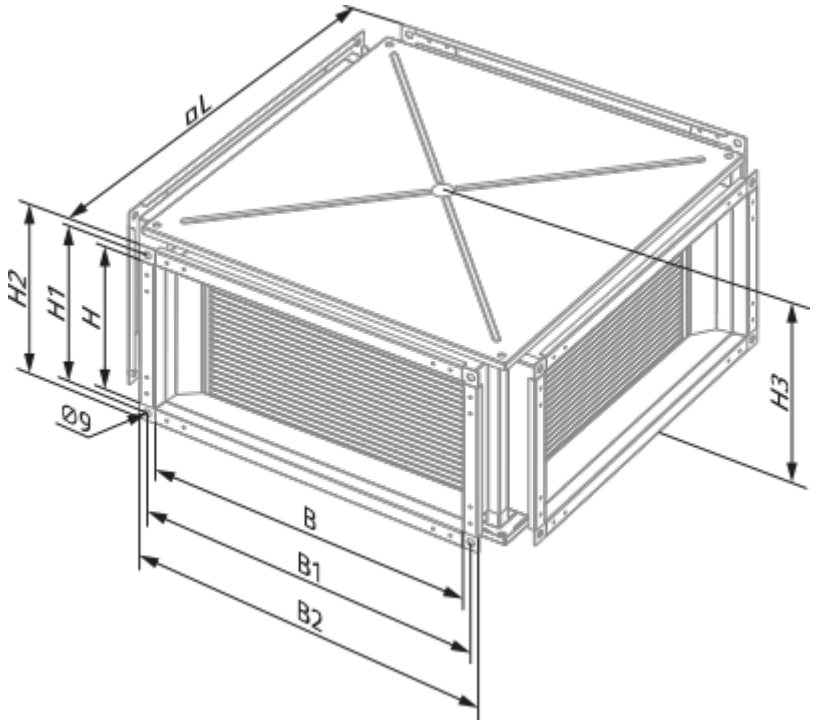
øL
H2
H1
H
Ø9
H3
B
B1
B2