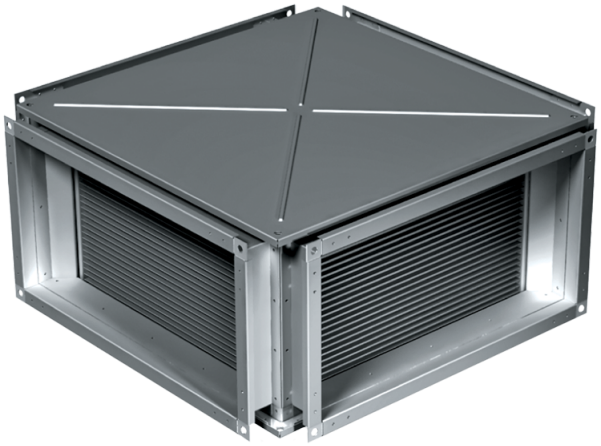

KWT 70x40

Plate heat exchangers for rectangular ducts

- Casing material: Galvanized steel

	Unit of measurement	KWT 70x40
Weight	kg	47.8

Dimensions

B	B1	B2	H	H1	H2	H3	L
700	720	740	400	420	440	475	830

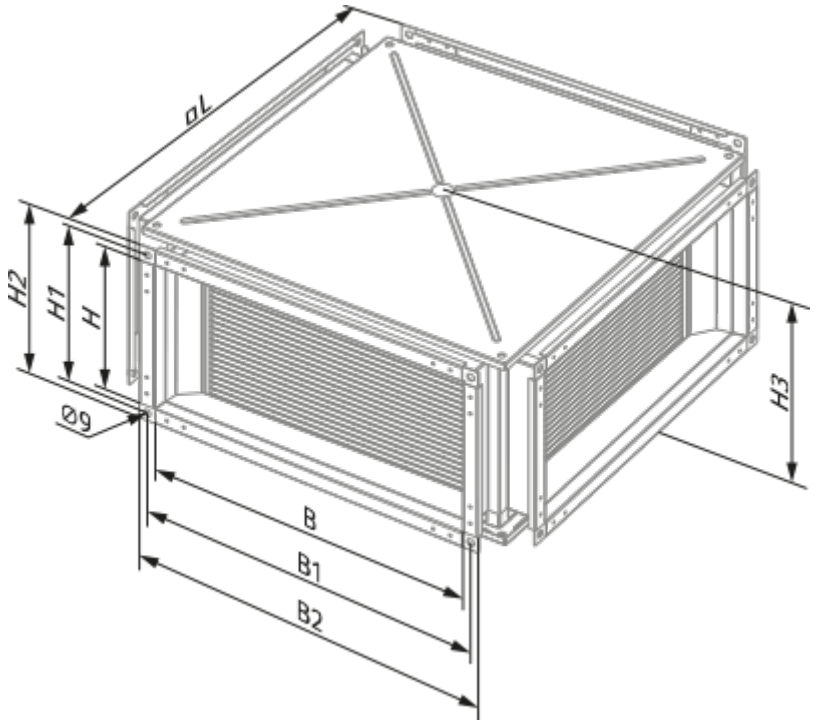
øL
H2
H1
H
Ø9
H3
B
B1
B2