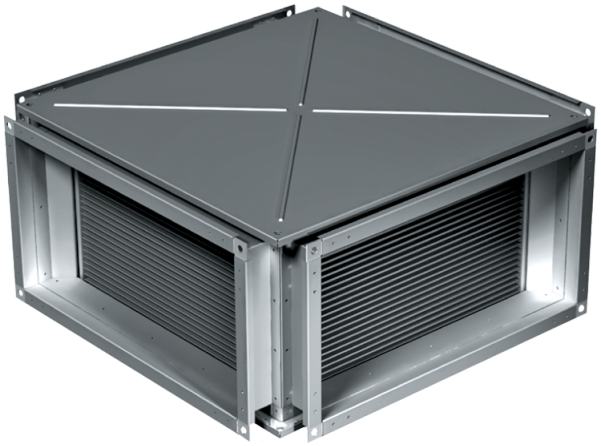

KWT 60x35

Plate heat exchangers for rectangular ducts

- Casing material: Galvanized steel

	Unit of measurement	KWT 60x35
Weight	kg	33.4

Dimensions

B	B1	B2	H	H1	H2	H3	L
600	620	640	350	370	390	425	730

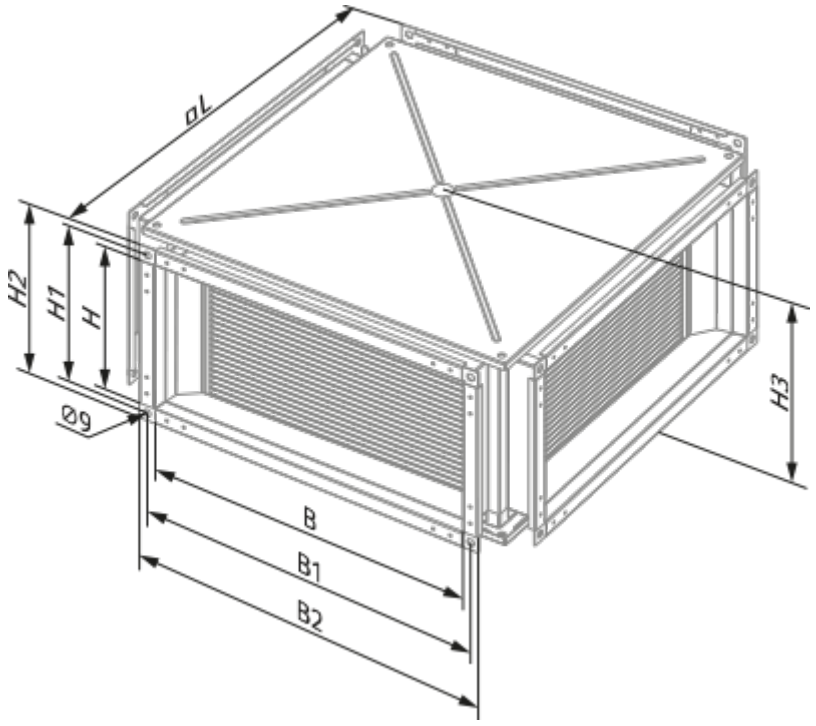
øL
H2
H1
H
Ø9
H3
B
B1
B2