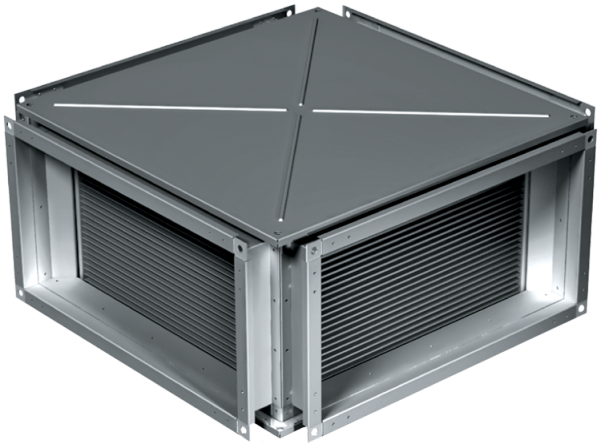

KWT 50x25

Plate heat exchangers for rectangular ducts

- Casing material: Galvanized steel

	Unit of measurement	KWT 50x25
Weight	kg	22.6

Dimensions

B	B1	B2	H	H1	H2	H3	L
500	520	540	250	270	290	325	630

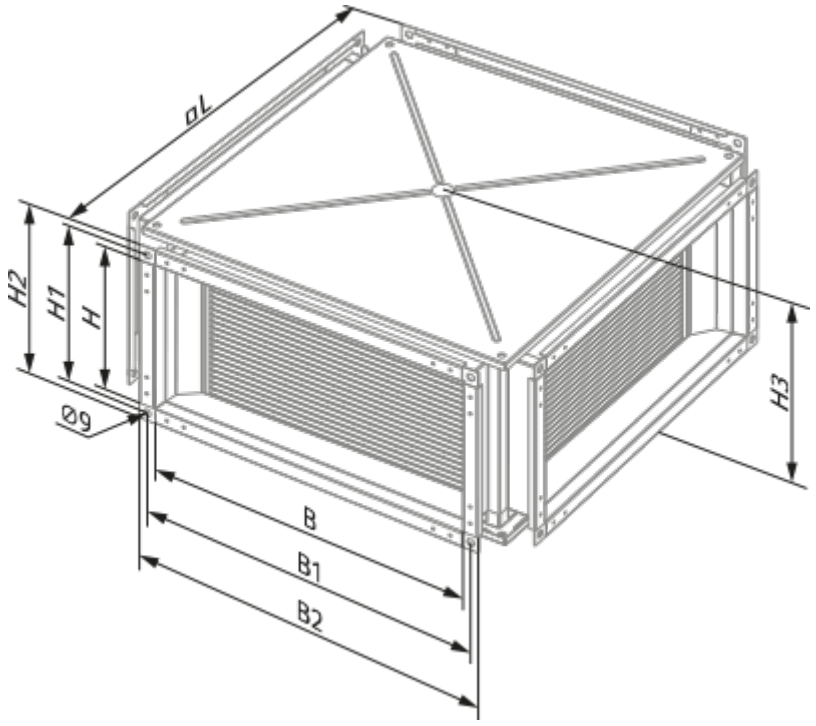
øL
H2
H1
H
Ø9
H3
B
B1
B2