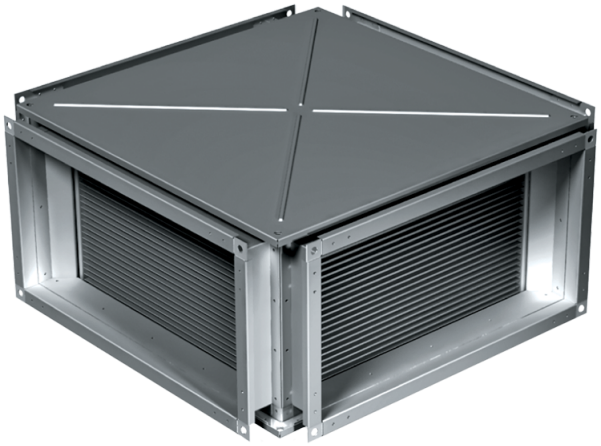

# KWT 100x50

Plate heat exchangers for rectangular ducts

- Casing material: Galvanized steel

| | Unit of measurement | KWT 100x50 |
|---|---|---|
| Weight | kg | 78.3 |

## Dimensions

| B | B1 | B2 | H | H1 | H2 | H3 | L |
|---|---|---|---|---|---|---|---|
| 1000 | 1020 | 1040 | 500 | 520 | 540 | 575 | 1130 |

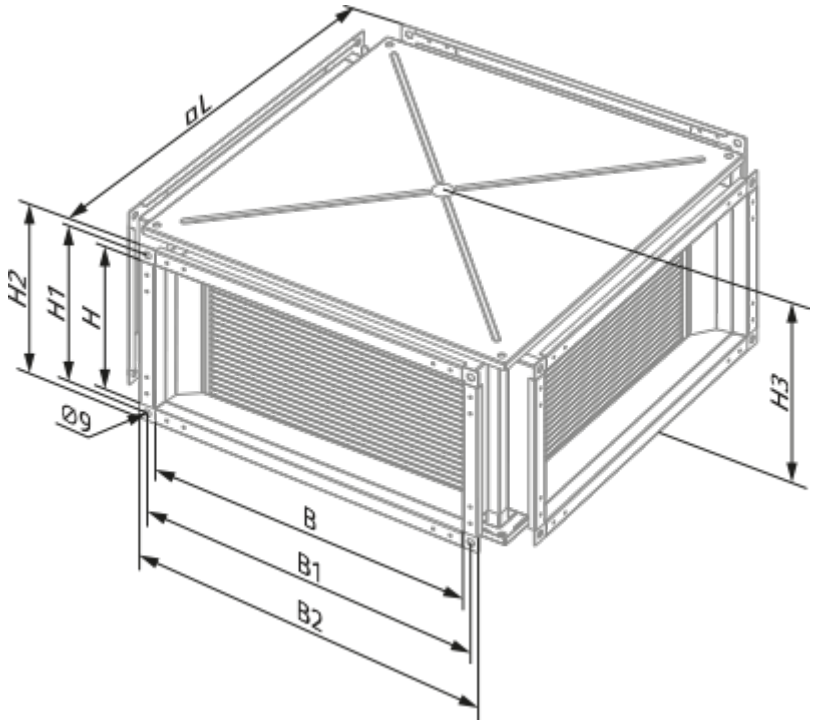
øL
H2
H1
H
Ø9
H3
B
B1
B2