

# KWK 90x50-3

Duct water cooling units for rectangular air ducts

- Casing material: Galvanized steel

| | Unit of measurement | KWK 90x50-3 |
|---|---|---|
| Weight | kg | 31.5 |

## Dimensions

| B | B1 | B2 | H | H1 | H2 | L | K |
|---|---|---|---|---|---|---|---|
| 900 | 940 | 970 | 500 | 595 | 442 | 56 | G 3/4'' |

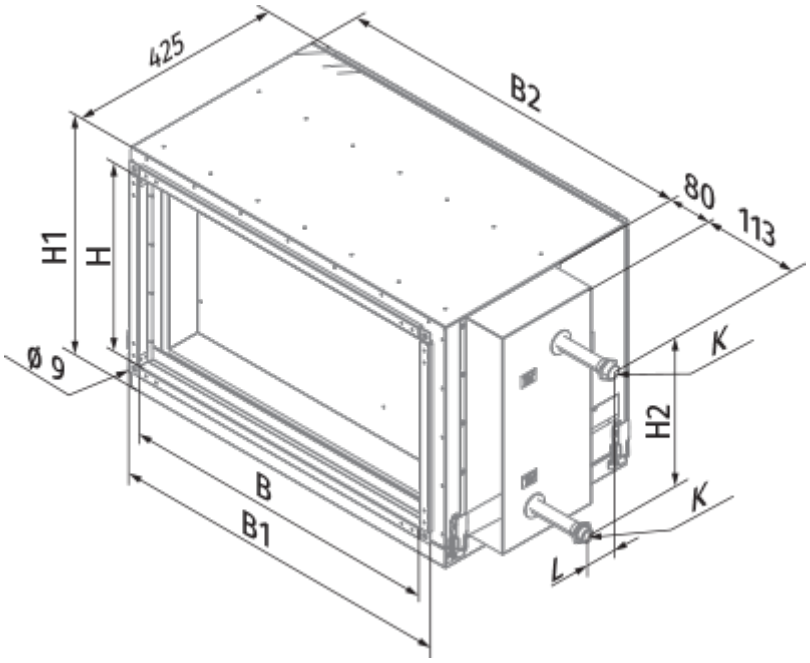
425
B2
80
113
H1
H
ø 9
K
H2
K
B
B1
L