

KWK 70x40-3

Duct water cooling units for rectangular air ducts

- Casing material: Galvanized steel

	Unit of measurement	KWK 70x40-3
Weight	kg	21.9

Dimensions

B	B1	B2	H	H1	H2	L	K
700	740	770	400	495	314	56	G 3/4''

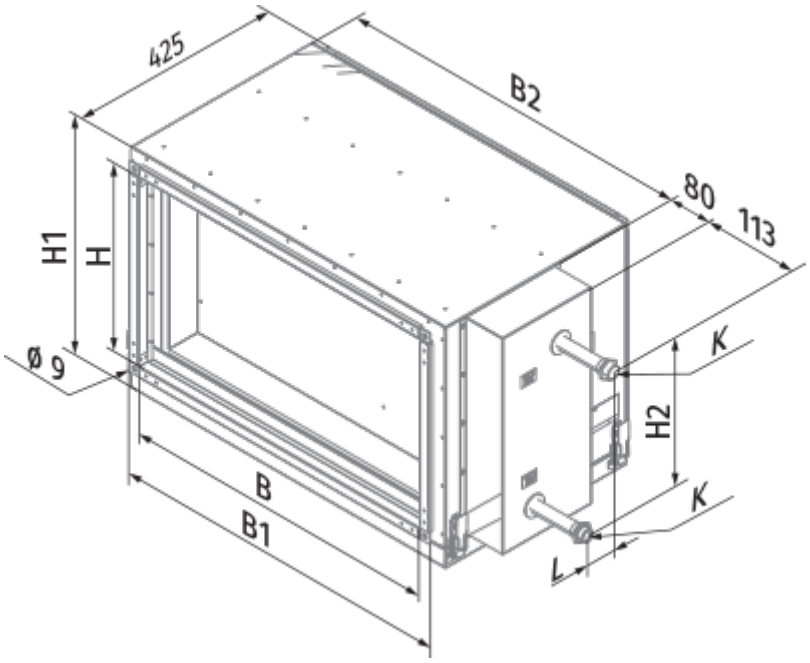
425
B2
80
113
H1
H
ø 9
K
H2
K
B
B1
L