

KWK 50x25-3

Duct water cooling units for rectangular air ducts

- Casing material: Galvanized steel

	Unit of measurement	KWK 50x25-3
Weight	kg	12.8

Dimensions

B	B1	B2	H	H1	H2	L	K
500	500	570	250	345	188	45	G 3/4''

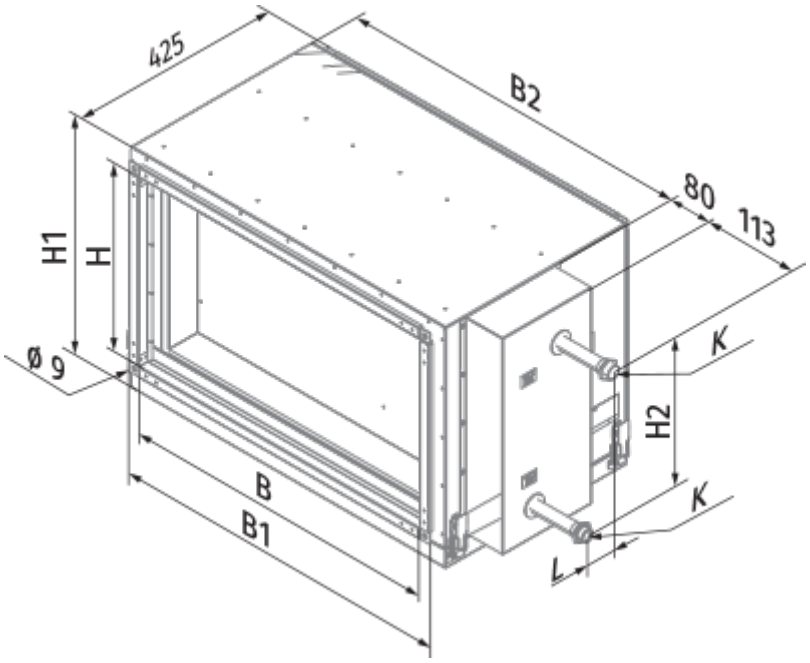
425
B2
80
113
H1
H
ø 9
K
H2
K
B
B1
L