

KWK 100x50-3

Duct water cooling units for rectangular air ducts

- Casing material: Galvanized steel

	Unit of measurement	KWK 100x50-3
Weight	kg	32

Dimensions

B	B1	B2	H	H1	H2	L	K
1000	1040	1070	500	595	442	56	G 1’’

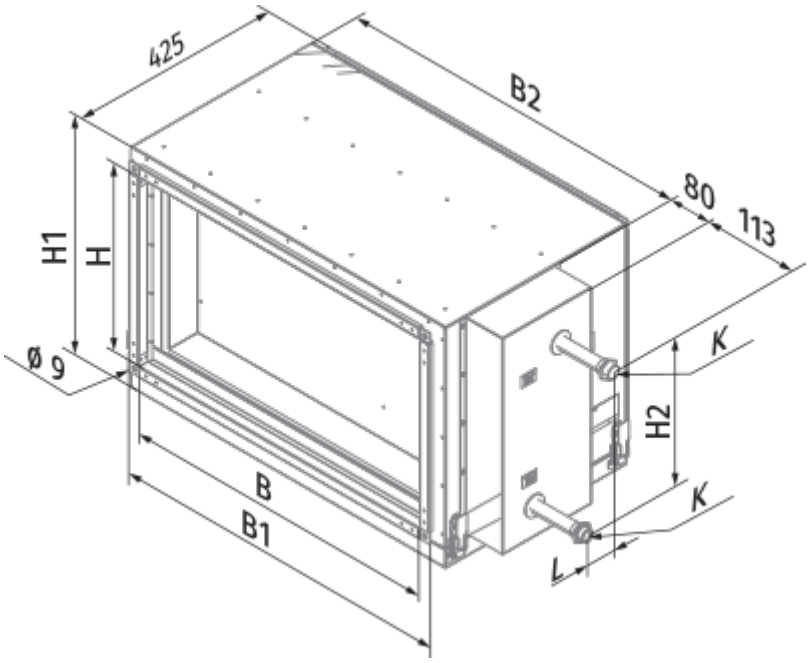
425
B2
80
113
H1
H
ø 9
K
H2
K
B
B1
L