

KSZ 315

Cross joint for round duct

- Casing material: Galvanized steel

	Unit of measurement	KSZ 315

Dimensions

Ø D1	Ø D2	L
315	315	415

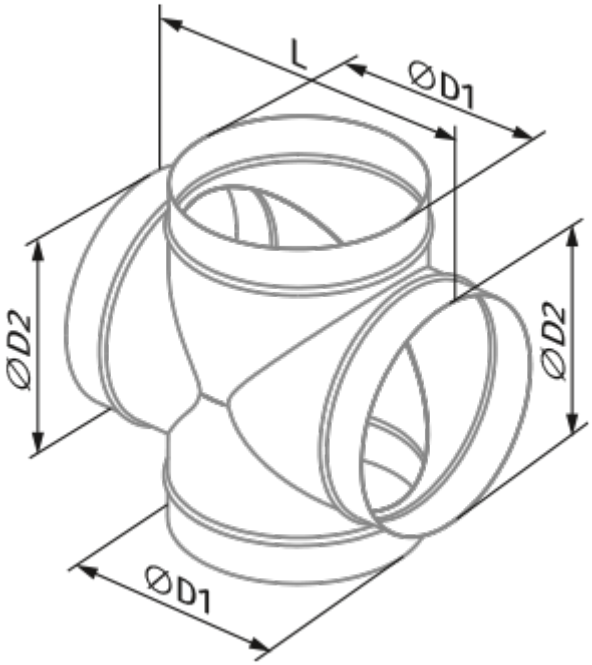
L
ØD1
ØD2
ØD2
ØD1