

KSZ 250

Cross joint for round duct

- Casing material: Galvanized steel

	Unit of measurement	KSZ 250

Dimensions

Ø D1	Ø D2	L
250	250	350

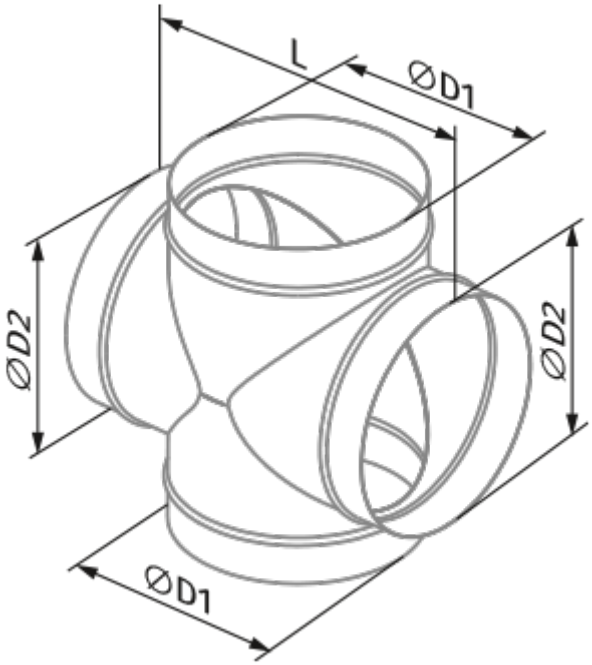
L
ØD1
ØD2
ØD2
ØD1