

KSZ 200

Cross joint for round duct

- Casing material: Galvanized steel

	Unit of measurement	KSZ 200

Dimensions

Ø D1	Ø D2	L
200	200	300

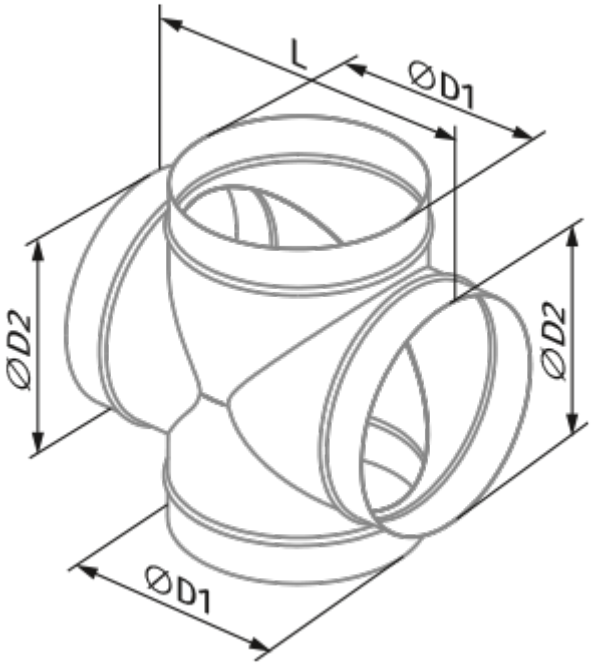
L
ØD1
ØD2
ØD2
ØD1