

KSZ 125

Cross joint for round duct

- Casing material: Galvanized steel

	Unit of measurement	KSZ 125

Dimensions

Ø D1	Ø D2	L
125	125	215

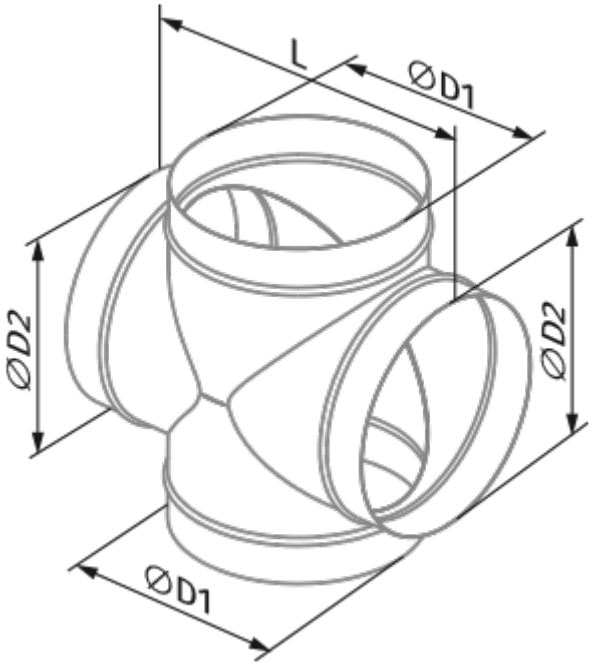
L
ØD1
ØD2
ØD2
ØD1