

KSM 250

Cross joint for round duct

- Casing material: Coated steel

	Unit of measurement	KSM 250

Dimensions

Ø D1	Ø D2	L
250	250	350

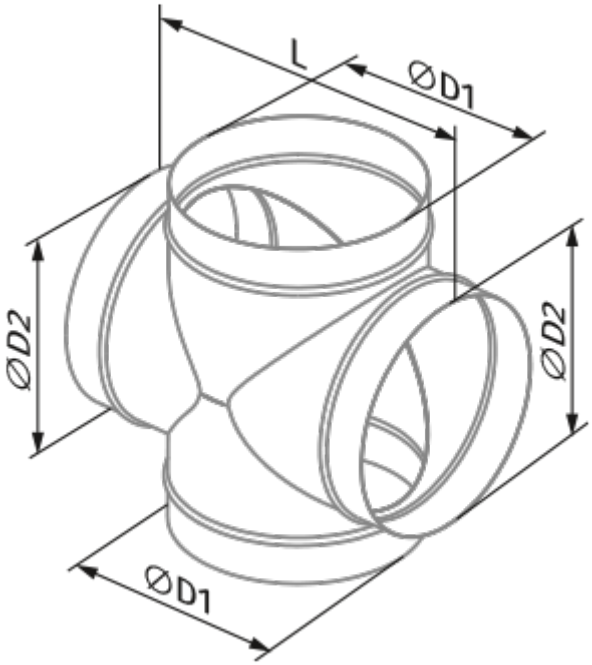
L
ØD1
ØD2
ØD2
ØD1