

KSM 200

Cross joint for round duct

- Casing material: Coated steel

	Unit of measurement	KSM 200

Dimensions

Ø D1	Ø D2	L
200	200	300

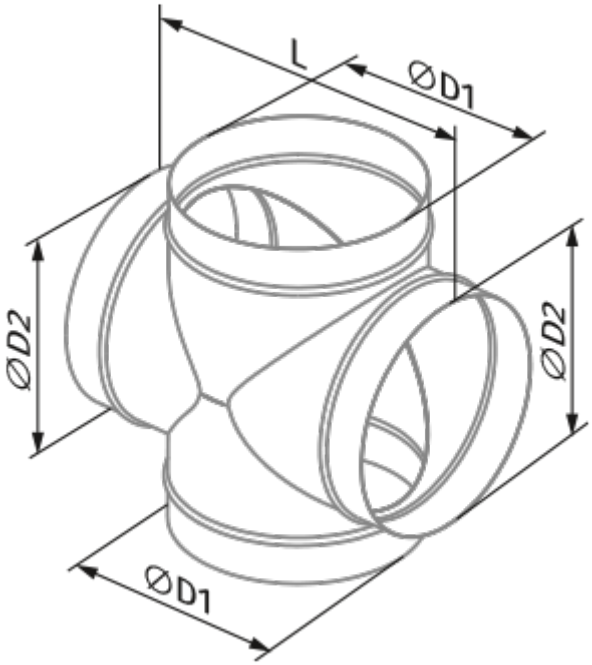
L
ØD1
ØD2
ØD2
ØD1