

KSM 160

Cross joint for round duct

- Casing material: Coated steel

	Unit of measurement	KSM 160

Dimensions

Ø D1	Ø D2	L
160	160	250

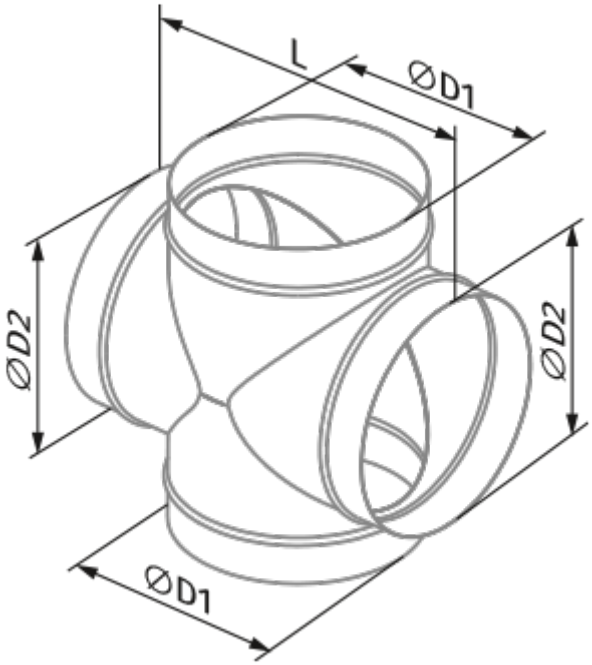
L
ØD1
ØD2
ØD2
ØD1