

KSM 150

Cross joint for round duct

- Casing material: Coated steel

	Unit of measurement	KSM 150

Dimensions

Ø D1	Ø D2	L
150	150	240

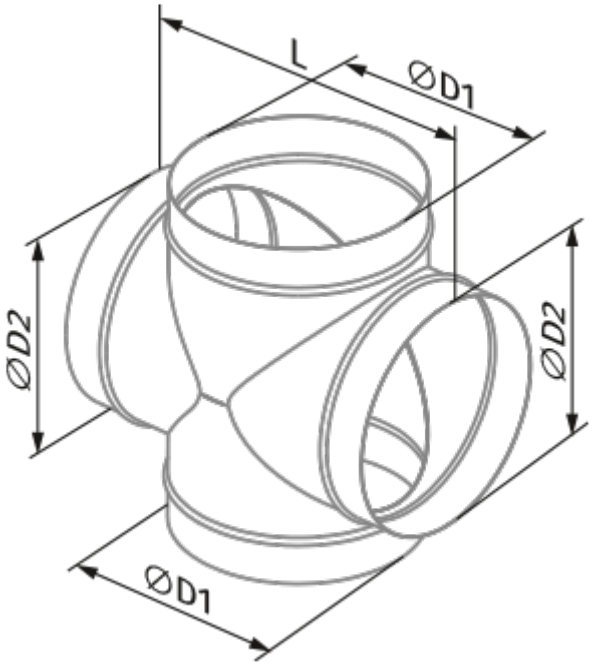
L
ØD1
ØD2
ØD2
ØD1