

KSM 125

Cross joint for round duct

- Casing material: Coated steel

	Unit of measurement	KSM 125

Dimensions

Ø D1	Ø D2	L
125	125	215

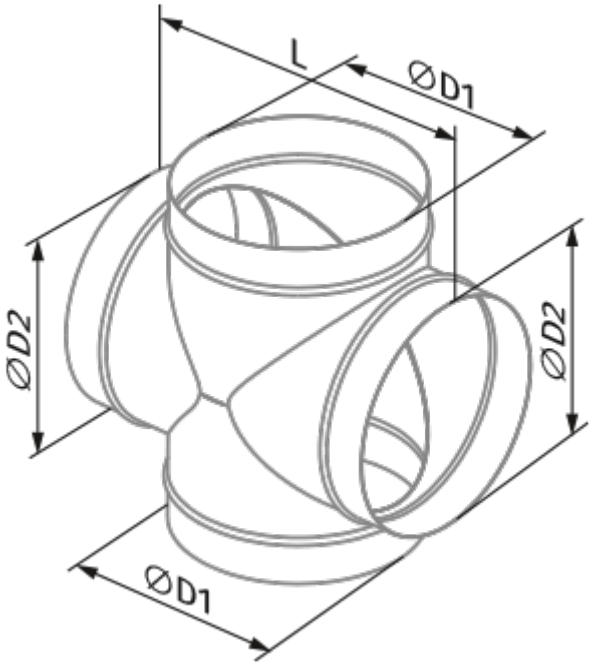
L
ØD1
ØD2
ØD2
ØD1