

KSM 100

Cross joint for round duct

- Casing material: Coated steel

	Unit of measurement	KSM 100

Dimensions

Ø D1	Ø D2	L
100	100	190

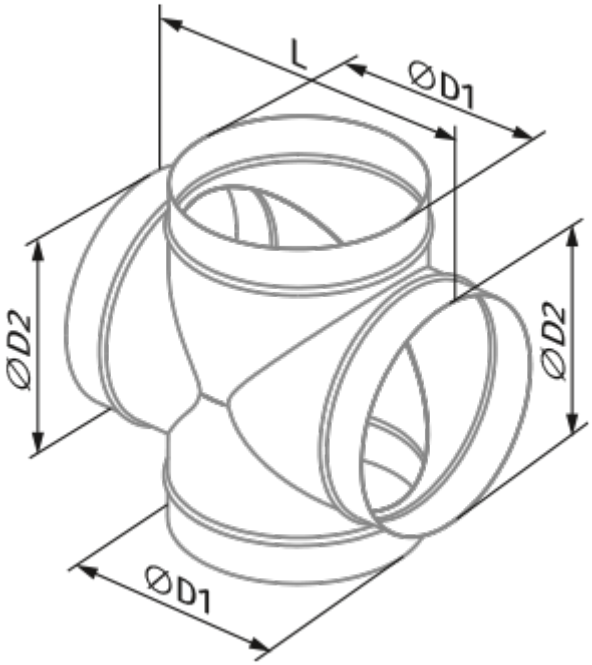
L
ØD1
ØD2
ØD2
ØD1