

KOMFORT Ultra EC L2 300-H S2 white

Compact heat recovery air handling units

• Heat exchanger type: Cross flow
• Heat exchanger material: Polystyrene
• Sound-insulated casing
• Control: Speed controller
• Casing material: Double-skinned white painted metal panels
• CO2 sensor: Optional
• PM2.5 sensor: Optional

	Unit of measurement	KOMFORT Ultra EC L2 300-H S2 white
Phases	-	1
Minimum supply voltage	V	230
Maximum supply voltage	V	230
Power supply frequency	Hz	50/60
Maximum airflow	m³/h	300
Heat recovery efficiency, max	%	79
Heat exchanger type	-	Cross flow
Heat exchanger material	-	Polystyrene
Weight	kg	32
Transported air temperature (max)	°C	40
Transported air temperature (min)	°C	-25
Ambient air temperature max	°C	40
Ambient air temperature min	°C	1
Ingress protection rating	-	IP22
Ambient air humidity max	%	80
Ingress protection rating of the drive	-	IP44

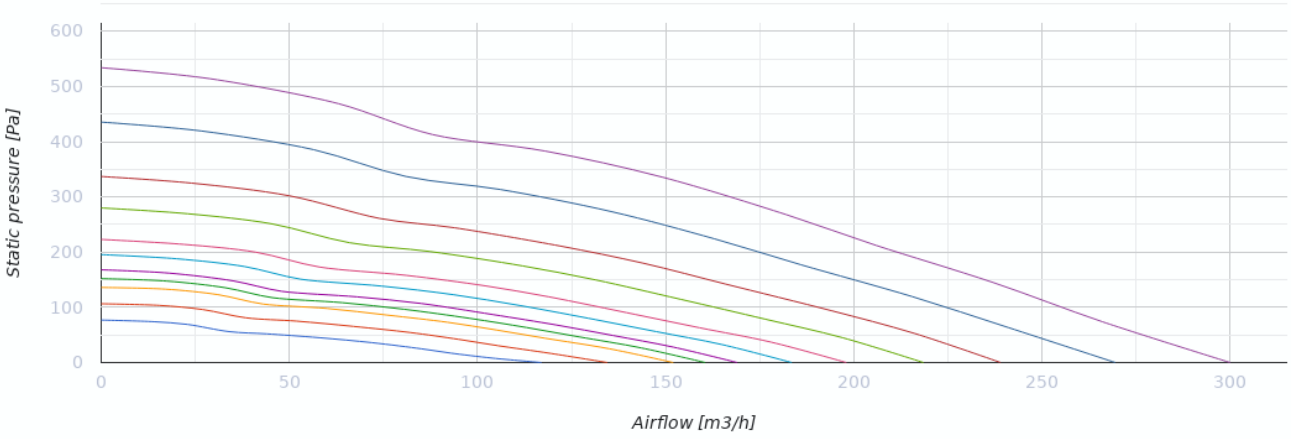

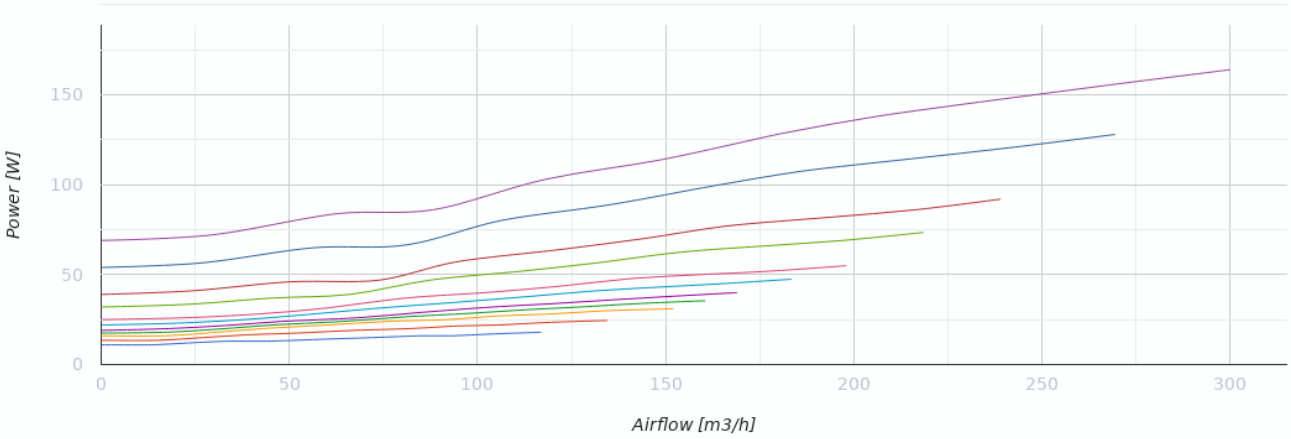

Dimensions

ØD	B	H	H1	L	L1
125	300	443	43	713	810

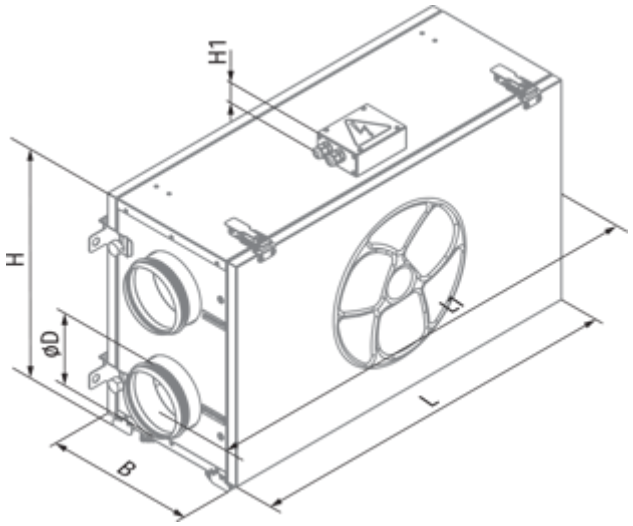

Ecodesign

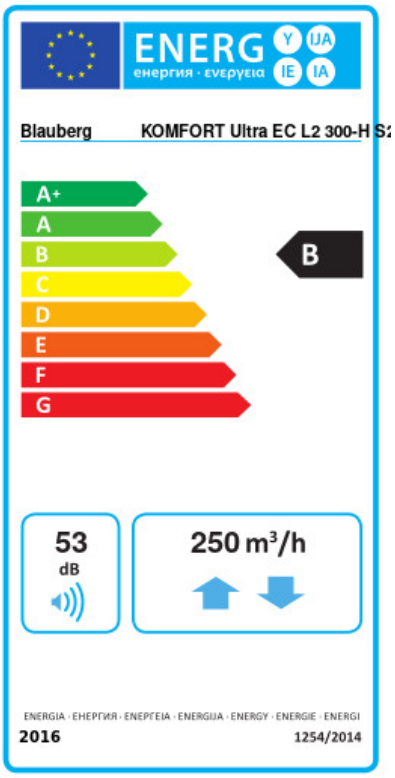

Trademark	Blauberg					
Model	KOMFORT Ultra EC L2 300-H S2 white					
Specific energy consumption (SEC) (kWh/(m²/a))	Cold		Average		Warm	
	-56.6	A+	-26.7	B	-6.9	F
Type of ventilation unit	Bidirectional					
Type of drive installed	Variable speed					
Type of heat recovery system	Recuperative					
Thermal efficiency of heat recovery (%)	62					
Maximum flow rate (m³/h)	250					
Electric power input (W)	150					
Reference flow rate (m³/s)	0.044					
Reference pressure difference (Pa)	50					
Specific power input (SPI) (W/(m³/h))	0.313					
Control typology	Manual control					
Maximum internal leakage rates (%)	2.7					
Maximum external leakage rates (%)	2.7					
Declared typology	RVU BVU					
Sound power level (dB(A))	53					
The annual electricity consumption (AEC) (kWh/a)	Cold		Average		Warm	
	973		436		391	
The annual heating saved (AHS) (kWh/a)	Cold		Average		Warm	
	7218		3690		1669	

Accessories

For round ducts

Name	Photo	Description
SD 125/600		Silencers for round ducts
SD 125/900		Silencers for round ducts

SD 125/1200		Silencers for round ducts

For round ducts

Name	Photo	Description
VRV 125		Backdraft dampers with spring for round ducts

EC motors regulators

Name	Photo	Description
CDT E/0-10		Speed control for EC motors

Other accessories

Name	Photo	Description
FP 240x184x40 F8		F8 filter
FP 240x184x40 G4		G4 panel filter
SB C4 200/240		