

KOMFORT Ultra EC L2 300-H S14 white

Compact heat recovery air handling units

- Heat exchanger type: Cross flow
- Heat exchanger material: Polystyrene
- Sound-insulated casing
- Control: Wired control panel
- Casing material: Double-skinned white painted metal panels
- CO2 sensor: Optional
- PM2.5 sensor: Optional

	Unit of measurement	KOMFORT Ultra EC L2 300-H S14 white
Phases	-	1
Minimum supply voltage	V	230
Maximum supply voltage	V	230
Power supply frequency	Hz	50/60
Maximum airflow	m³/h	300
Heat recovery efficiency, max	%	79
Heat exchanger type	-	Cross flow
Heat exchanger material	-	Polystyrene
Weight	kg	32
Transported air temperature (max)	°C	40
Transported air temperature (min)	°C	-25
Ambient air temperature max	°C	40
Ambient air temperature min	°C	1
Ingress protection rating	-	IP22
Ambient air humidity max	%	80
Ingress protection rating of the drive	-	IP44

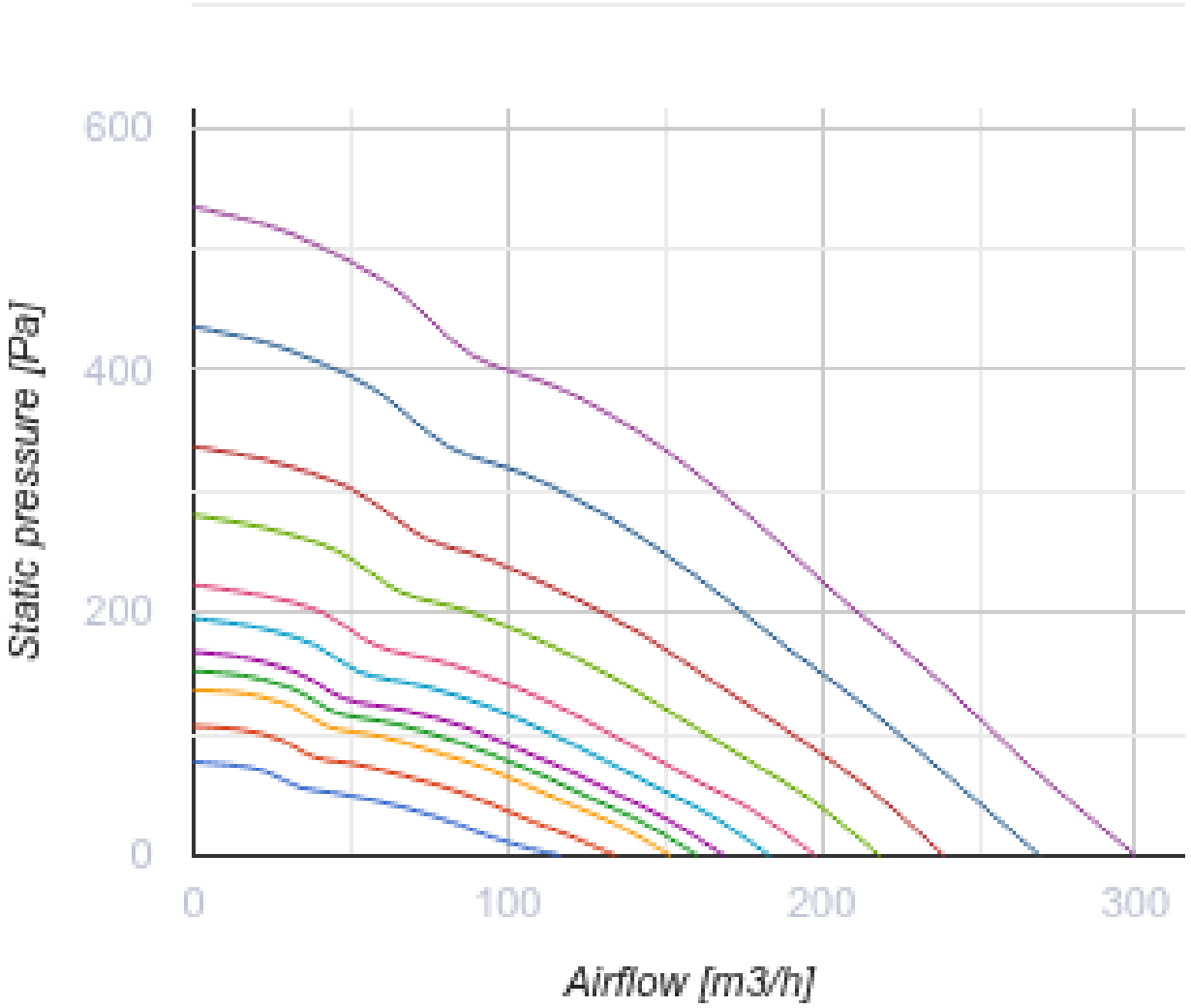
600
400
200
0
Static pressure [Pa]
0
100
200
300
Airflow [m3/h]

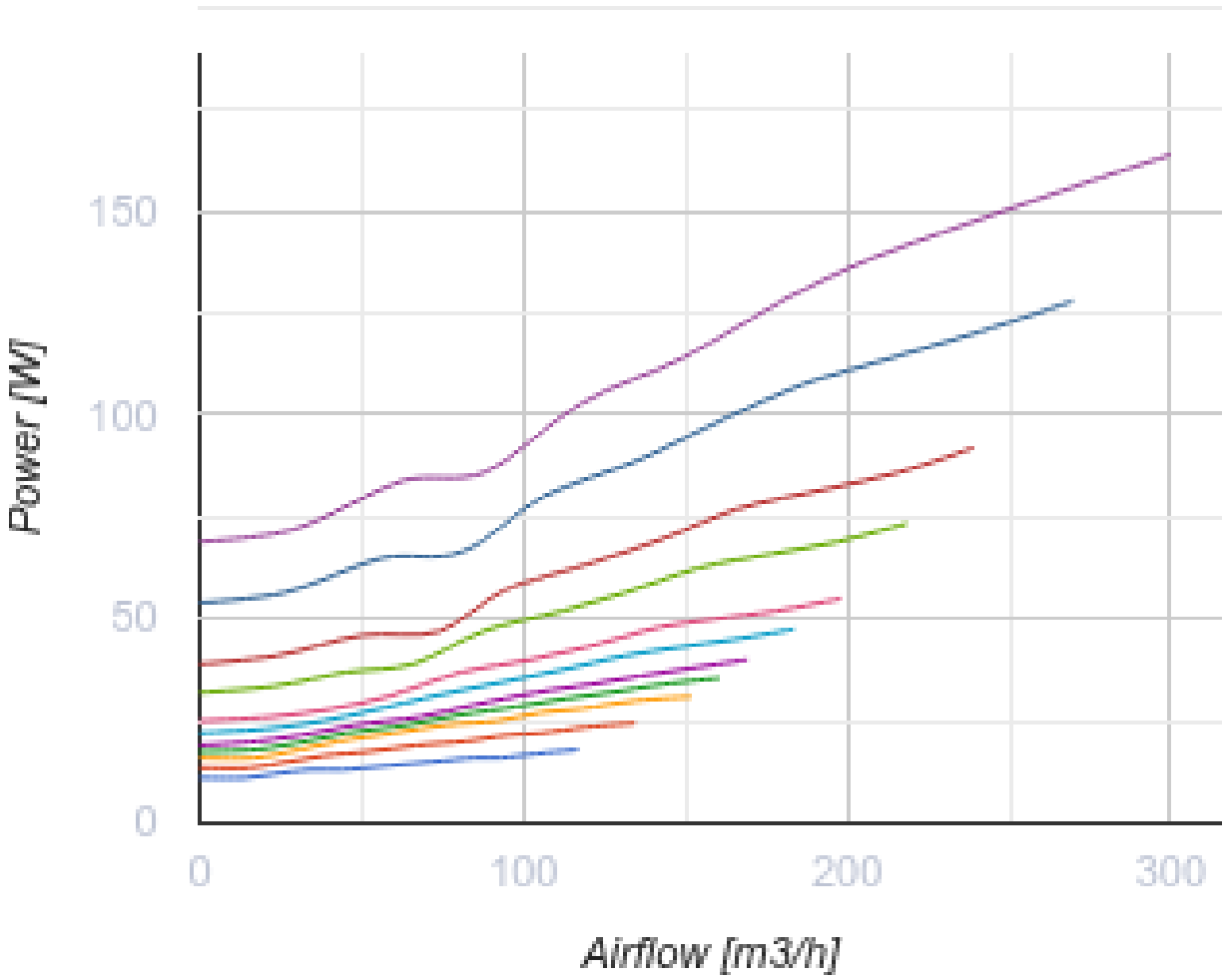

Dimensions

ØD	B	H	H1	L	L1
125	300	443	63	713	810

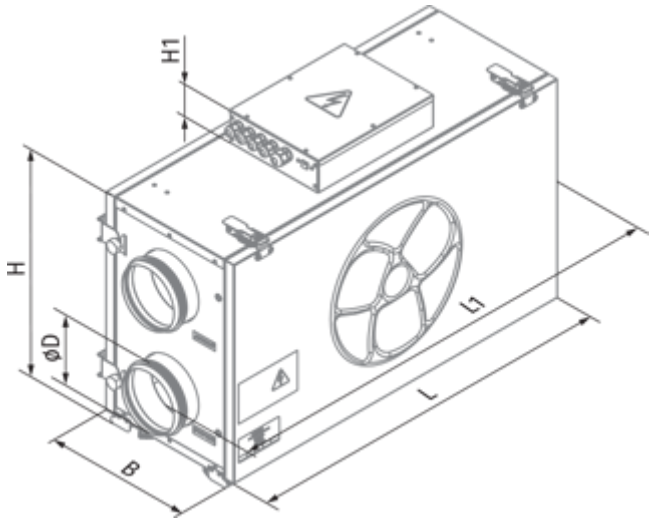
H1
H
ØD
B
L1
L

Ecodesign

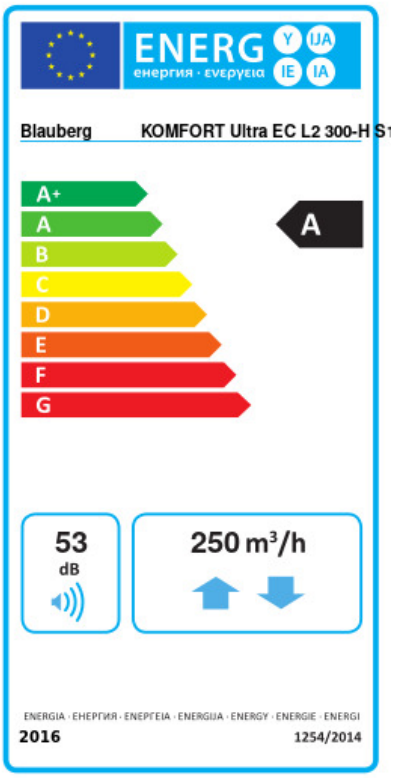

Trademark	Blauberg					
Model	KOMFORT Ultra EC L2 300-H S14 white					
Specific energy consumption (SEC) (kWh/(m²/a))	Cold		Average		Warm	
	-70.5	A+	-36.6	A	-14.5	E
Type of ventilation unit	Bidirectional					
Type of drive installed	Variable speed					
Type of heat recovery system	Recuperative					
Thermal efficiency of heat recovery (%)	62					
Maximum flow rate (m³/h)	250					
Electric power input (W)	150					
Reference flow rate (m³/s)	0.044					
Reference pressure difference (Pa)	50					
Specific power input (SPI) (W/(m³/h))	0.313					
Control typology	Local demand control					
Maximum internal leakage rates (%)	2.7					
Maximum external leakage rates (%)	2.7					
Declared typology	RVU BVU					
Sound power level (dB(A))	53					
The annual electricity consumption (AEC) (kWh/a)	Cold		Average		Warm	
	747		210		165	
The annual heating saved (AHS) (kWh/a)	Cold		Average		Warm	
	8047		4114		1860	

Accessories

For round ducts

Name	Photo	Description
SD 125/600		Silencers for round ducts
SD 125/900		Silencers for round ducts

SD 125/1200		Silencers for round ducts

For round ducts

Name	Photo	Description
VRV 125		Backdraft dampers with spring for round ducts
VKA 125		Air dampers for round ducts

CO2 sensors

Name	Photo	Description
CD-1		CO2 sensors
CD-2		CO2 sensors

Humidity sensors

Name	Photo	Description
FS2		Humidity sensor

Other accessories

Name	Photo	Description
FP 240x184x40 F8		F8 filter
FP 240x184x40 G4		G4 panel filter
SB C4 200/240		

Electric actuators

Name	Photo	Description

Belimo TF230		Electric actuators