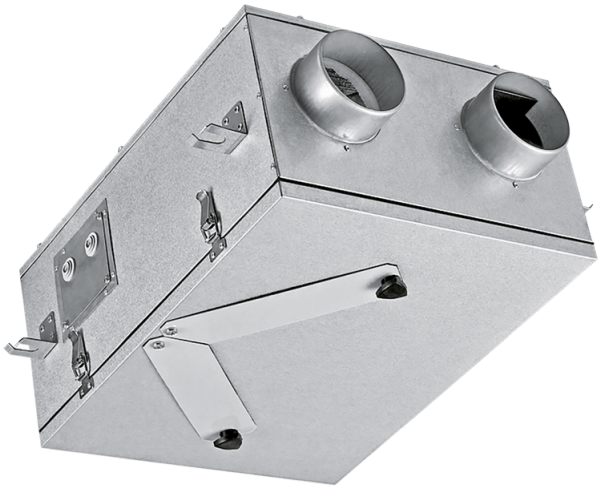

KOMFORT Ultra D 80 L

Single room heat recovery air handling units

- Heat exchanger type: Cross flow
- Heat exchanger material: Polystyrene
- Sound-insulated casing
- Casing material: Aluzinc

	Unit of measurement	KOMFORT Ultra D 80 L		
Speed	-	1	2	3
Phases	-	1		
Minimum supply voltage	V	230		
Maximum supply voltage	V	230		
Power supply frequency	Hz	50/60		
Maximum airflow	m³/h	40	55	70
Heat recovery efficiency, max	%	76		
Heat exchanger type	-	Cross flow		
Heat exchanger material	-	Polystyrene		
Weight	kg	10		
Transported air temperature (max)	°C	40		
Transported air temperature (min)	°C	-15		
Ambient air temperature max	°C	40		
Ambient air temperature min	°C	1		
Ingress protection rating	-	IP22		
Ambient air humidity max	%	60		
Ingress protection rating of the drive	-	IP44		

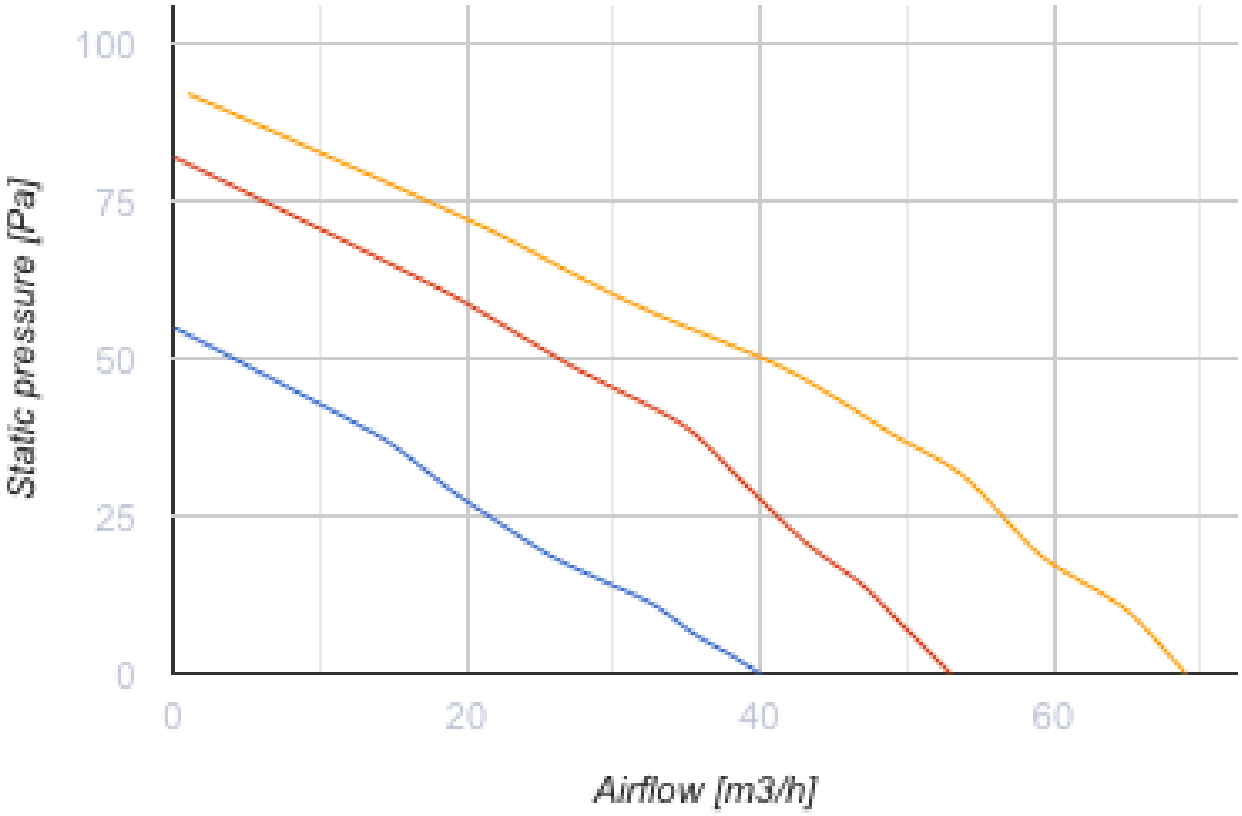

Dimensions

ØD	H	L	L1	B	B1	B2	B3
125	222	497	397	374	404	213	164

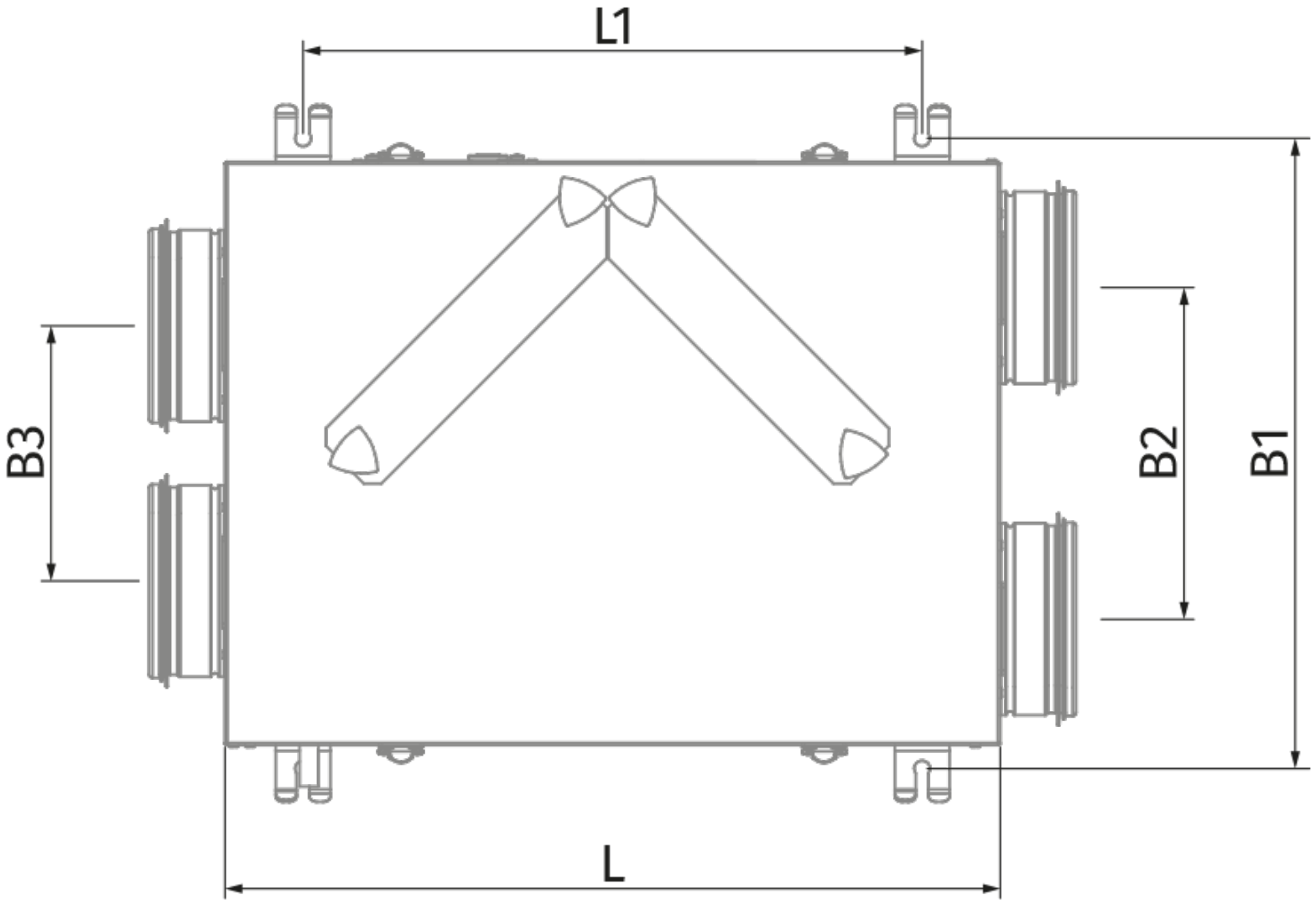
L1
B3
B2
B1
L

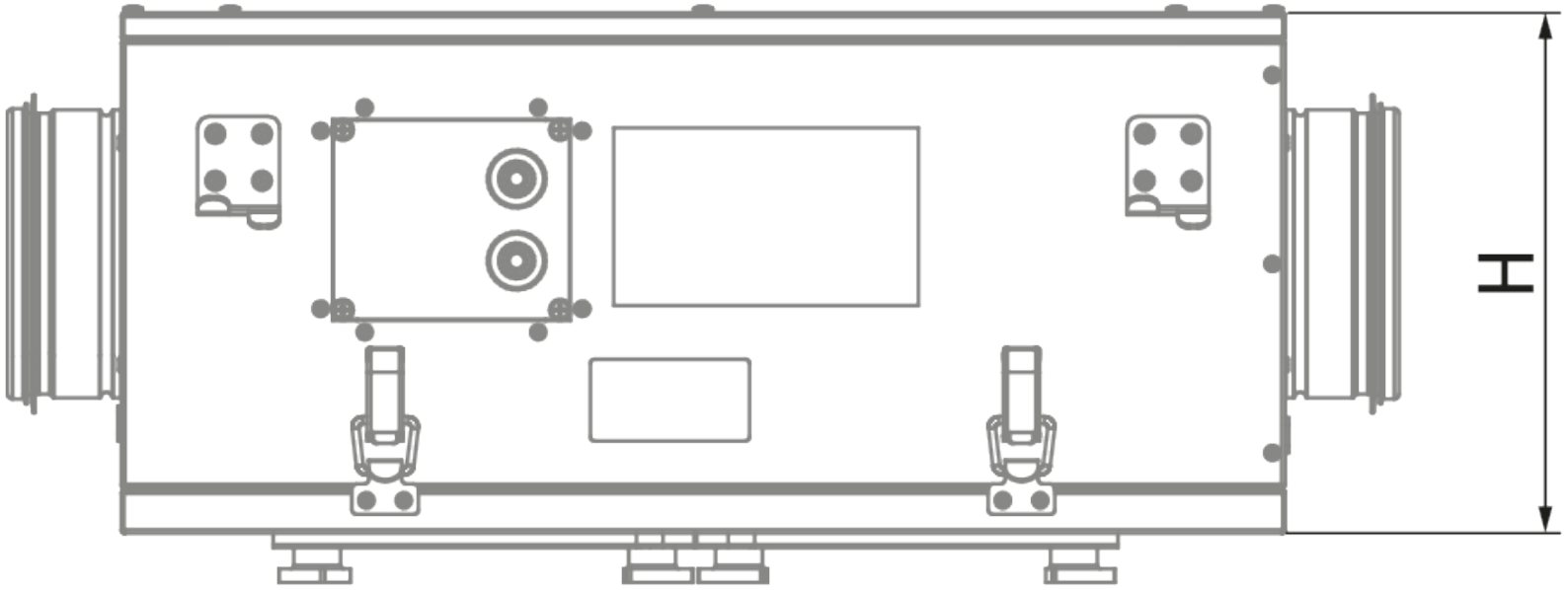
H

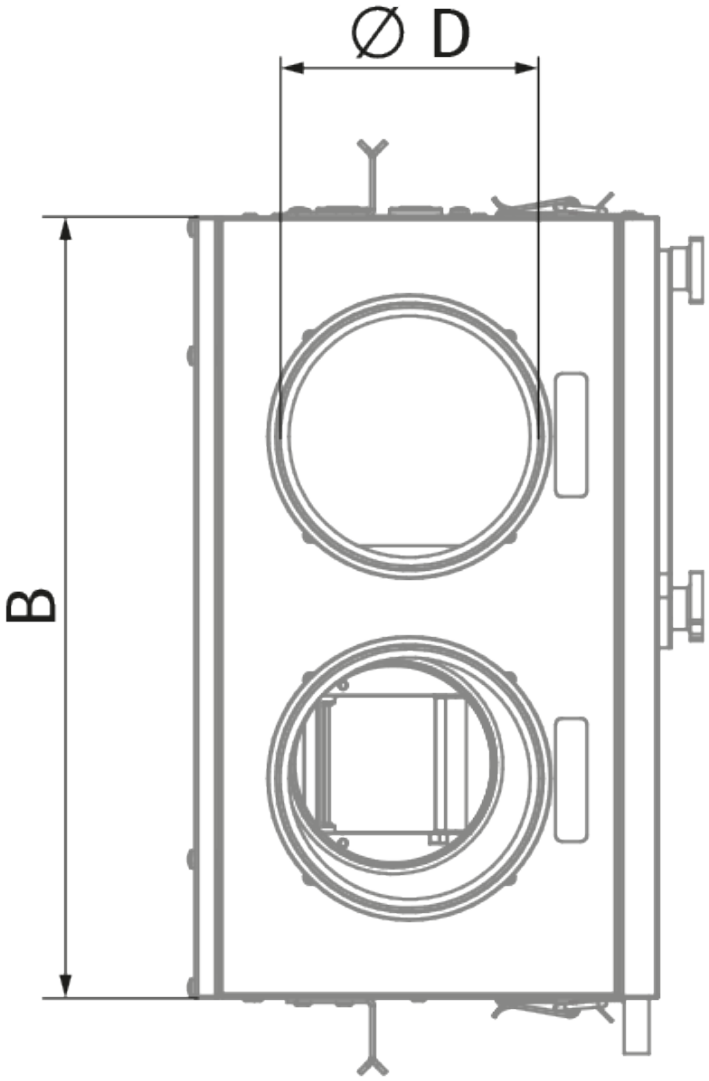
Ø D
B

Ecodesign

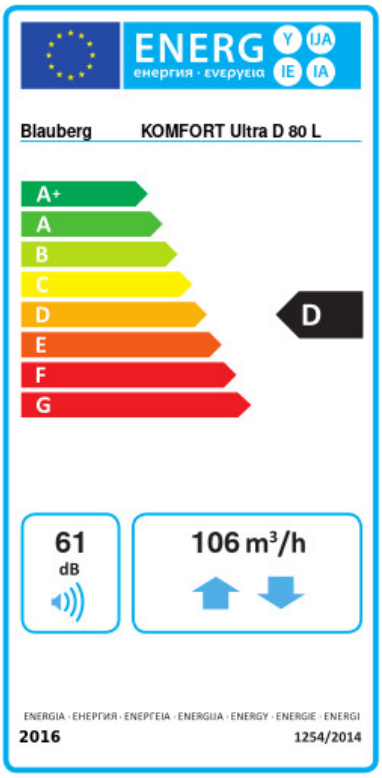

Trademark	Blauberg					
Model	KOMFORT Ultra D 80 L					
Specific energy consumption (SEC) (kWh/(m²/a))	Cold		Average		Warm	
	-54.1	A+	-22.3	D	-1.5	F
Type of ventilation unit	Bidirectional					
Type of drive installed	Multi-speed					
Type of heat recovery system	Recuperative					
Thermal efficiency of heat recovery (%)	68					
Maximum flow rate (m³/h)	106					
Electric power input (W)	56					
Reference flow rate (m³/s)	0.021					
Reference pressure difference (Pa)	50					
Specific power input (SPI) (W/(m³/h))	0.512					
Control typology	Manual control					
Maximum internal leakage rates (%)	2.7					
Maximum external leakage rates (%)	2.7					
Declared typology	RVU BVU					
Sound power level (dB(A))	61					
The annual electricity consumption (AEC) (kWh/a)	Cold		Average		Warm	
	1224		687		642	
The annual heating saved (AHS) (kWh/a)	Cold		Average		Warm	
	7592		3881		1755	

Accessories

For round ducts

Name	Photo	Description
SD 125/600		Silencers for round ducts
SD 125/900		Silencers for round ducts

SD 125/1200		Silencers for round ducts

For round ducts

Name	Photo	Description
VRV 125		Backdraft dampers with spring for round ducts

Other accessories

Name	Photo	Description
FP 205x198x8 G4		G4 panel filter

Fittings

Name	Photo	Description
K 125		Clamp for round flexible ducts