

KOMFORT Ultra 250-E ME

The KOMFORT Ultra ME series is the first in the Blauberg central fresh air system to adopt the EPP unibody structure, which has excellent sealing, noise reduction and heat preservation performance

- Heat exchanger type: Cross flow
- Sound-insulated casing
- Enthalpy heat exchanger
- Casing material: Coated steel

	Unit of measurement	KOMFORT Ultra 250-E ME
Minimum supply voltage	V	220
Maximum supply voltage	V	220
Power supply frequency	Hz	50
Maximum airflow	m^3/h	250
Heat recovery efficiency, max	%	73
Heat exchanger type	-	Cross flow
Weight	kg	22
Transported air temperature (max)	°C	60
Transported air temperature (min)	°C	-25

Dimensions

ØD	B	H	H1	L	L1
125	285	463	63	732	836

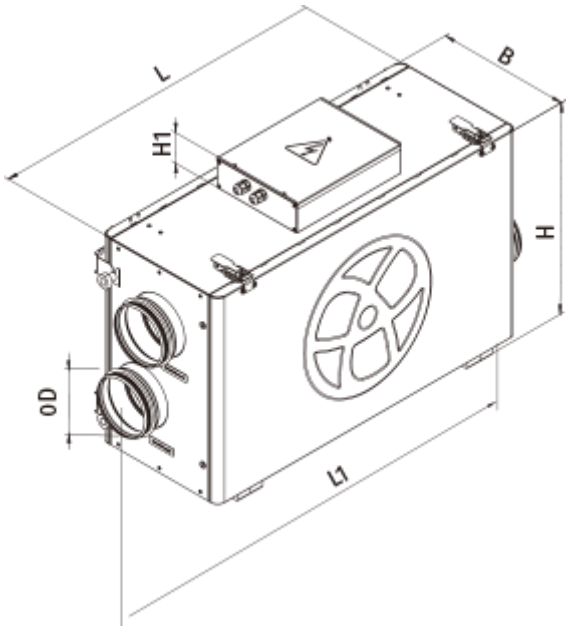
L
B
H1
H
ØD
L1