

KOMFORT Roto EC S6EK 200 S21

Air handling units with rotary heat exchanger

- Power of electrical reheater: 700
- Heat exchanger type: Rotary
- Heat exchanger material: Aluminum
- Sound-insulated casing
- Reheater: Electric
- BMS protocol: ModBus
- Control: Smartphone
- Casing material: Galvanized steel
- Humidity sensor: Optional
- CO2 sensor: Optional
- PM2.5 sensor: Optional

	Unit of measurement	KOMFORT Roto EC S6EK 200 S21
Phases	-	1
Minimum supply voltage	V	230
Maximum supply voltage	V	230
Power supply frequency	Hz	50/60
Power of electrical reheater	W	700
Maximum airflow	m³/h	270
Heat recovery efficiency, max	%	92
Heat exchanger type	-	Rotary
Heat exchanger material	-	Aluminum
Weight	kg	48
Transported air temperature (max)	°C	40
Transported air temperature (min)	°C	-25
Ambient air temperature min	°C	1
Ambient air temperature max	°C	40
Ingress protection rating	-	IP22
Ingress protection rating of the drive	-	IP44
Ambient air humidity max	%	60

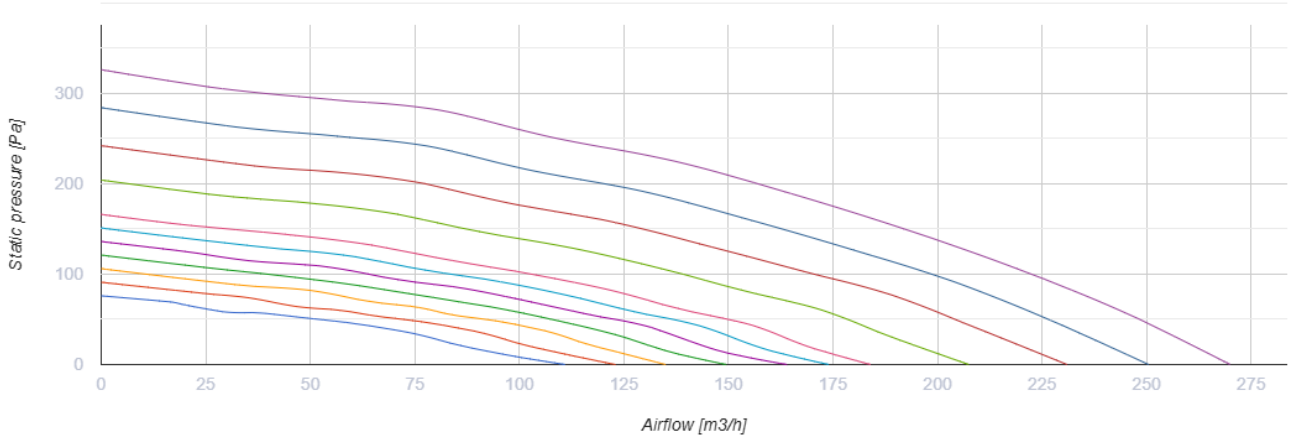

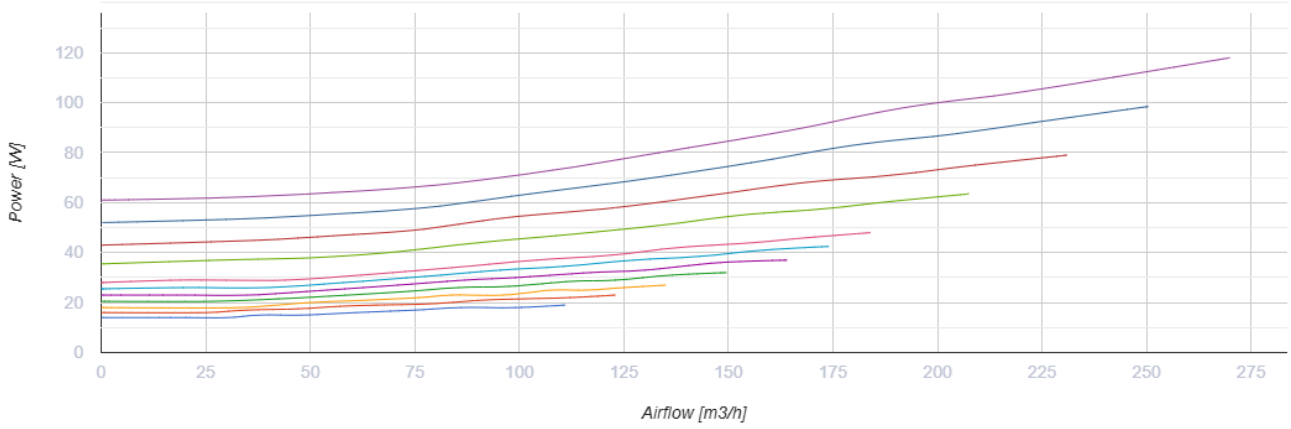

Dimensions

Ø D	B	B1	H	H1	L
125	348	371	791	865	598

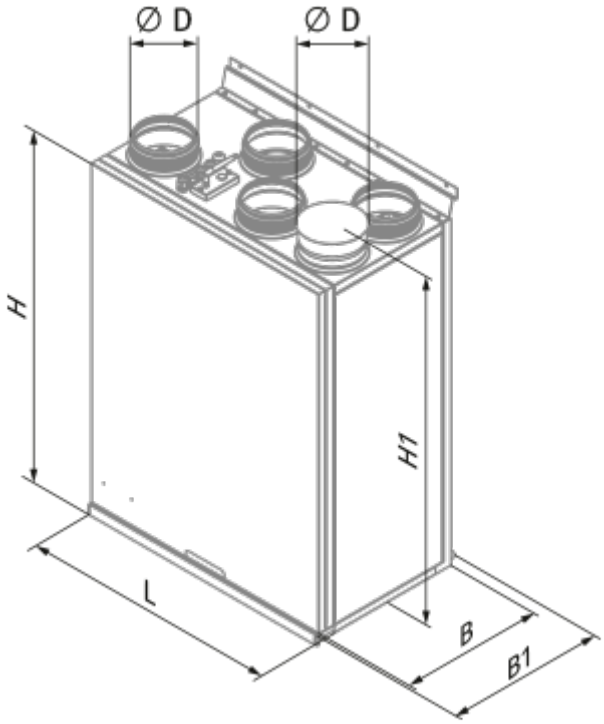

Accessories

For round ducts

Name	Photo	Description
SD 125/600		Silencers for round ducts
SD 125/900		Silencers for round ducts
SD 125/1200		Silencers for round ducts

For round ducts

Name	Photo	Description
VRV 125		Backdraft dampers with spring for round ducts
VKA 125		Air dampers for round ducts

Control Panels

Name	Photo	Description
S25		LCD control panel
S22		Control panels
S22 Wi-Fi		Control panels

CO2 sensors

Name	Photo	Description
CD-1		CO2 sensors
CD-2		CO2 sensors

Humidity sensors

Name	Photo	Description
FS2		Humidity sensor

Other accessories

Name	Photo	Description
FP 284x103x60 F7		F7 panel filter
FP 284x103x60 G4		G4 panel filter