

KOMFORT Roto EC LW 2000-2 S18

Air handling units with rotary heat exchanger

- Heat exchanger type: Rotary
- Heat exchanger material: Aluminum
- Sound-insulated casing
- Reheater: Water
- Control: Wired control panel
- Casing material: Aluzinc steel
- Humidity sensor: Optional
- CO2 sensor: Optional
- PM2.5 sensor: Optional

	Unit of measurement	KOMFORT Roto EC LW 2000-2 S18
Phases	-	1
Minimum supply voltage	V	230
Maximum supply voltage	V	230
Power supply frequency	Hz	50/60
Maximum airflow	m³/h	2250
Heat recovery efficiency, max	%	93
Heat exchanger type	-	Rotary
Heat exchanger material	-	Aluminum
Weight	kg	198
Transported air temperature (max)	°C	40
Transported air temperature (min)	°C	-25
Ambient air temperature min	°C	1
Ambient air temperature max	°C	40
Ingress protection rating	-	IP22
Ingress protection rating of the drive	-	IP44
Ambient air humidity max	%	80

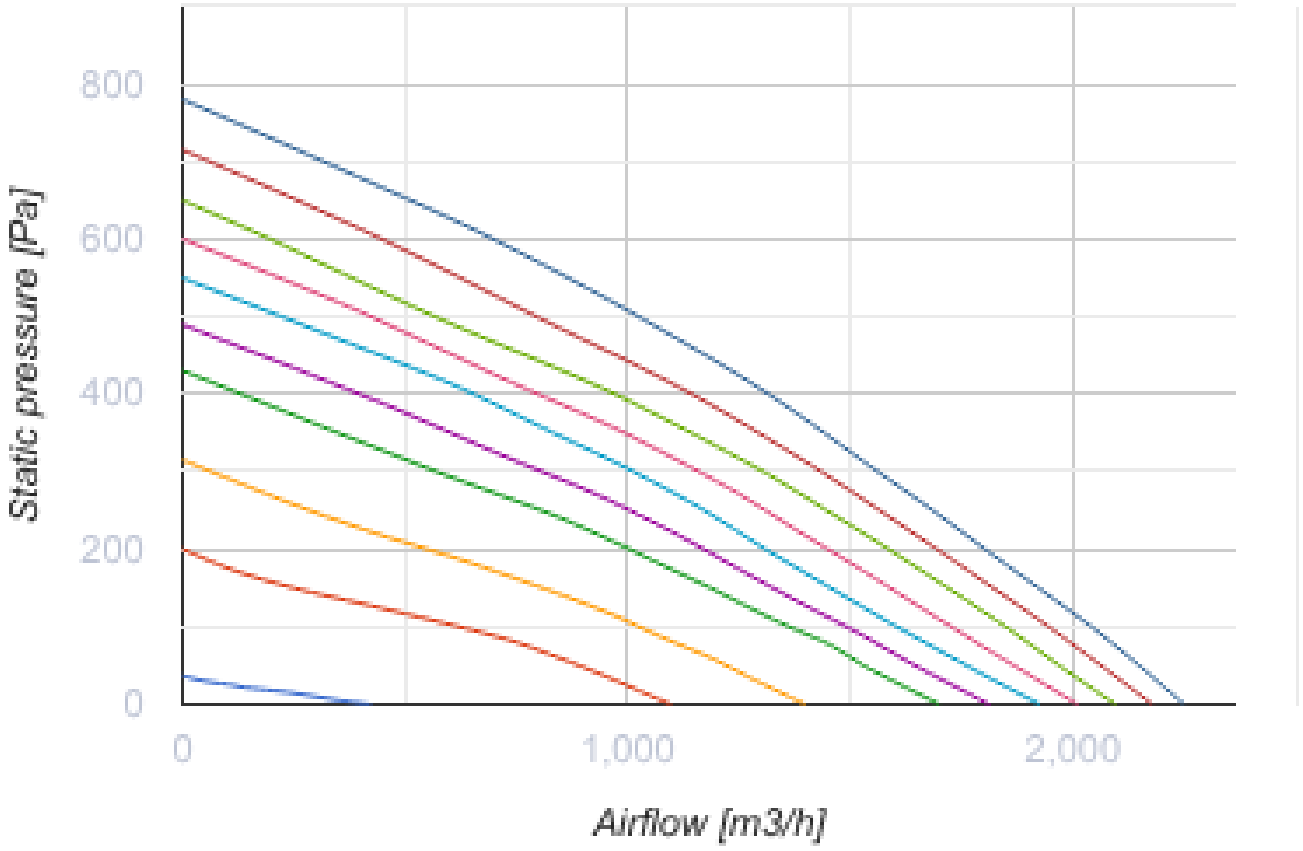
800
600
400
200
0
Static pressure [Pa]
0
1,000
2,000
Airflow [m3/h]

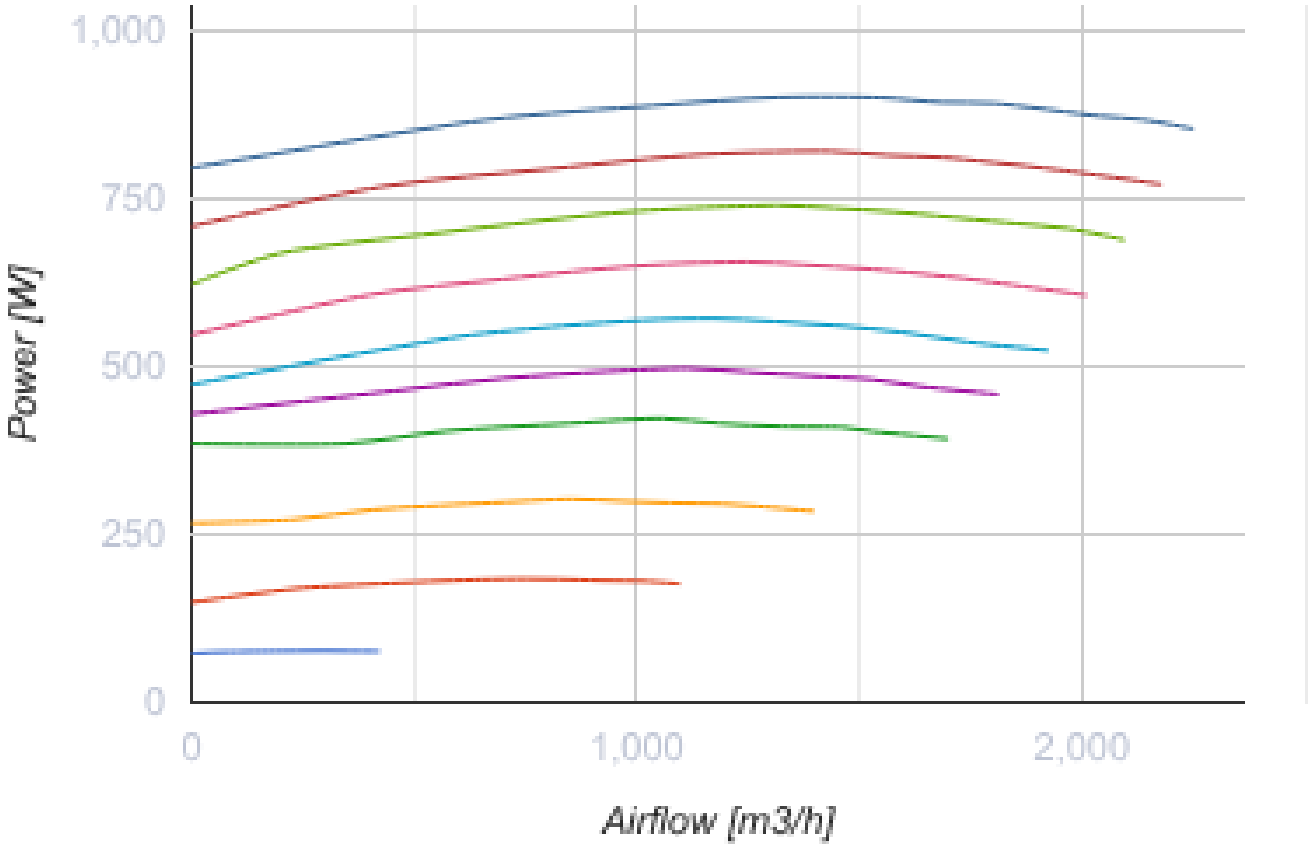

Dimensions

B	B1	H	L	X	Y
875	630	1010	1485	500	300

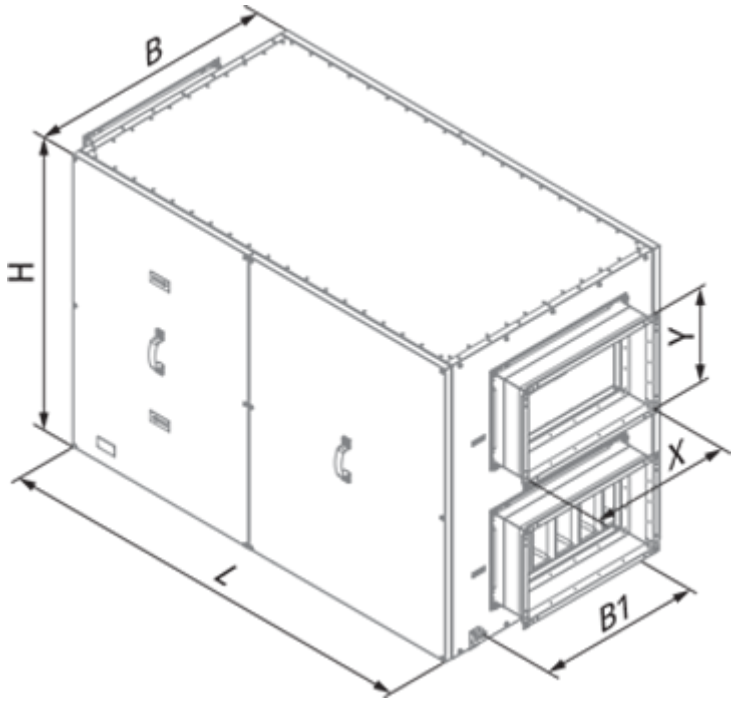

Accessories

For rectangular ducts

Name	Photo	Description
VRVS 50x30		Backdraft air dampers for rectangular ducts
VK 50x30		Air dampers for rectangular ducts

Mixing chambers

Name	Photo	Description
WMG 1-6		Water mixing units

Humidity sensors

Name	Photo	Description
FS2		Humidity sensor

Other accessories

Name	Photo	Description

FP 800x477x47 G4		G4 panel filter
FPT 800x477x27 G4		