

KOMFORT Roto EC LW 1000-2 S17

Air handling units with rotary heat exchanger

- Heat exchanger type: Rotary
- Heat exchanger material: Aluminum
- Sound-insulated casing
- Reheater: Water
- Control: Wired control panel
- Casing material: Aluzinc steel
- Humidity sensor: Optional
- CO2 sensor: Optional
- PM2.5 sensor: Optional

	Unit of measurement	KOMFORT Roto EC LW 1000-2 S17
Phases	-	1
Minimum supply voltage	V	230
Maximum supply voltage	V	230
Power supply frequency	Hz	50/60
Maximum airflow	m³/h	900
Heat recovery efficiency, max	%	95
Heat exchanger type	-	Rotary
Heat exchanger material	-	Aluminum
Weight	kg	130
Transported air temperature (max)	°C	40
Transported air temperature (min)	°C	-25
Ambient air temperature min	°C	1
Ambient air temperature max	°C	40
Ingress protection rating	-	IP22
Ambient air humidity max	%	80
Ingress protection rating of the drive	-	IP44

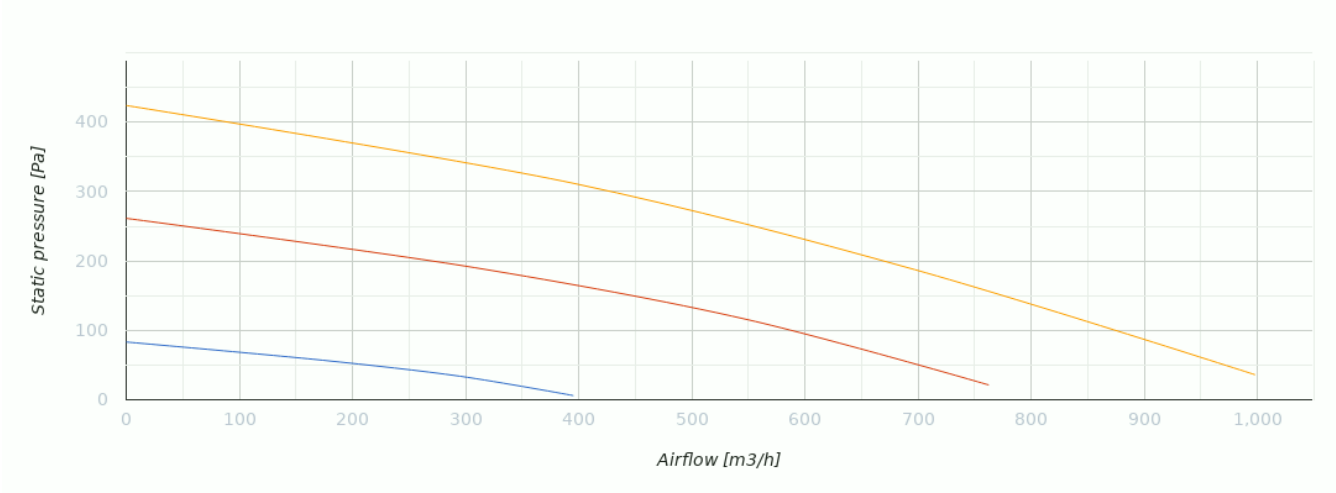

Dimensions

ØD	B	B1	H	L
249	745	580	700	1210

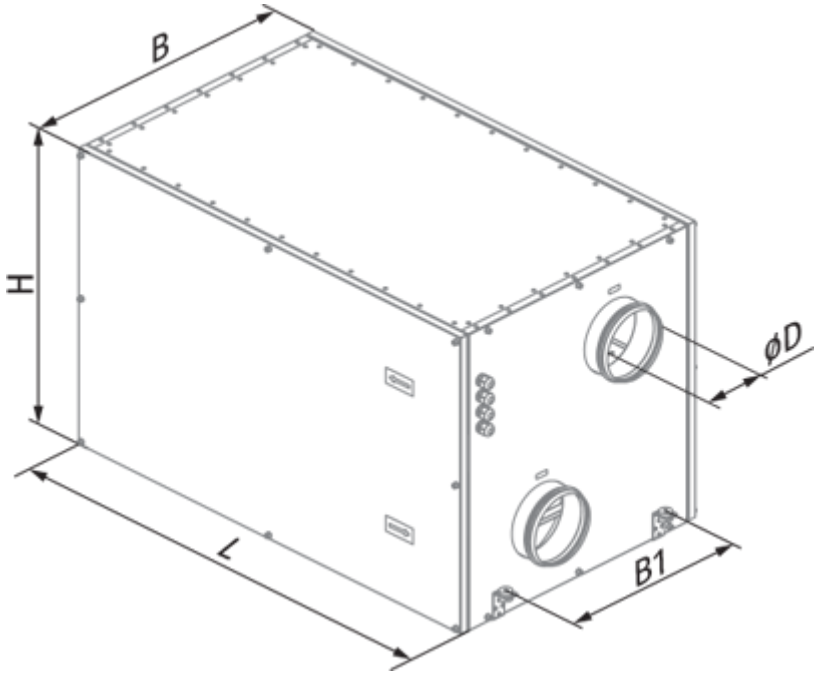

Accessories

For round ducts

Name	Photo	Description
SD 250/600		Silencers for round ducts

SD 250/900		Silencers for round ducts
SD 250/1200		Silencers for round ducts

For round ducts

Name	Photo	Description
VRV 250		Backdraft dampers with spring for round ducts
VRVS 250		Backdraft air dampers for round ducts

Mixing chambers

Name	Photo	Description
WMG 3/4-4		Water mixing units

Humidity sensors

Name	Photo	Description
FS2		Humidity sensor

Other accessories

Name	Photo	Description
FP 700x332x48 G4		G4 panel filter
FPT 700x333x27 G4		