



KOMFORT Roto EC LHP 400 S18

Compact heat recovery air handling units

- Heat exchanger type: Rotary
- Heat exchanger material: Aluminum
- Sound-insulated casing
- Control: Wired control panel
- Casing material: Aluzinc steel
- Humidity sensor: Optional
- CO2 sensor: Optional
- PM2.5 sensor: Optional

	Unit of measurement	KOMFORT Roto EC LHP 400 S18
Phases	-	1
Minimum supply voltage	V	230
Maximum supply voltage	V	230
Power supply frequency	Hz	50
Maximum airflow	m³/h	520
Heat recovery efficiency, max	%	85
Heat exchanger type	-	Rotary
Heat exchanger material	-	Aluminum
Weight	kg	150
Transported air temperature (max)	°C	40
Transported air temperature (min)	°C	-10
Ambient air temperature min	°C	1
Ambient air temperature max	°C	40
Ingress protection rating	-	IP22
Ingress protection rating of the drive	-	IP44
Ambient air humidity max	%	80

Dimensions

ØD	B	H	L	L1
159	648	710	1250	1421

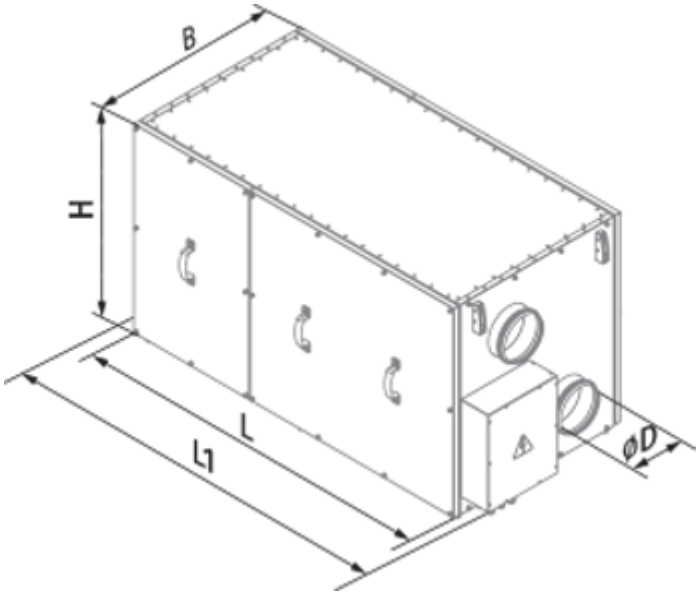

Accessories

For round ducts

Name	Photo	Description
VRV 160		Backdraft dampers with spring for round ducts
VKA 160		Air dampers for round ducts

Humidity sensors

Name	Photo	Description
FS2		Humidity sensor

Other accessories

Name	Photo	Description
FP 600x332x48 G4		G4 panel filter

FPT 600x330x27 F7		
FPT 600x330x27 G4		