

KOMFORT Roto EC LE 400-2 S17

Air handling units with rotary heat exchanger

- Power of electrical reheater: 2000
- Heat exchanger type: Rotary
- Heat exchanger material: Aluminum
- Sound-insulated casing
- Reheater: Electric
- Control: Wired control panel
- Casing material: Aluzinc steel
- Humidity sensor: Optional
- CO2 sensor: Optional
- PM2.5 sensor: Optional

	Unit of measurement	KOMFORT Roto EC LE 400-2 S17
Phases	-	1
Minimum supply voltage	V	230
Maximum supply voltage	V	230
Power supply frequency	Hz	50/60
Power of electrical reheater	W	2000
Maximum airflow	m³/h	400
Heat recovery efficiency, max	%	95
Heat exchanger type	-	Rotary
Heat exchanger material	-	Aluminum
Weight	kg	112
Transported air temperature (max)	°C	40
Transported air temperature (min)	°C	-25
Ambient air temperature min	°C	1
Ambient air temperature max	°C	40
Ingress protection rating	-	IP22
Ingress protection rating of the drive	-	IP44
Ambient air humidity max	%	80

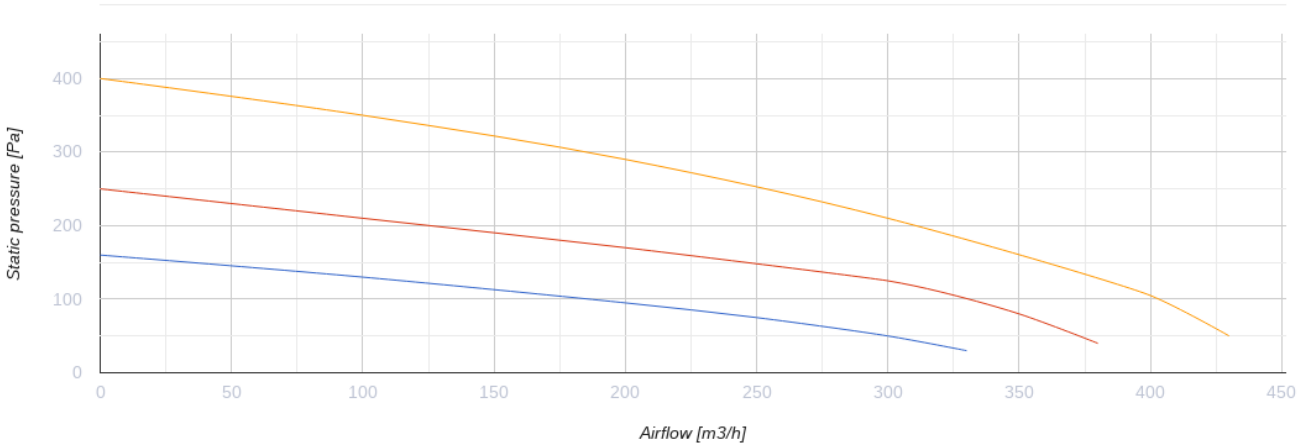

Dimensions

Ø D	B	B1	H	L
159	648	440	670	1050

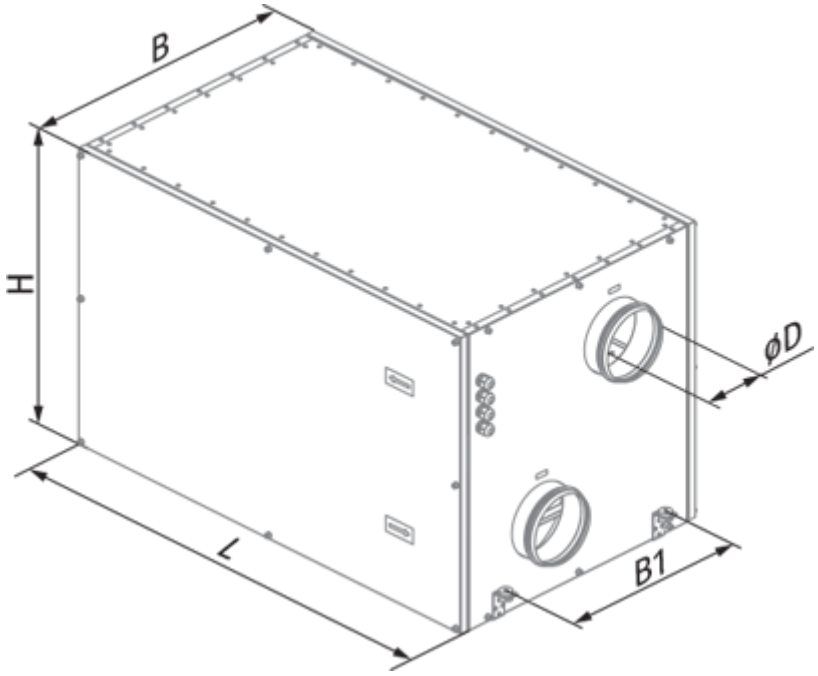

Accessories

For round ducts

Name	Photo	Description
SD 160/600		Silencers for round ducts

SD 160/900		Silencers for round ducts
SD 160/1200		Silencers for round ducts

For round ducts

Name	Photo	Description
VRV 160		Backdraft dampers with spring for round ducts
VRVS 160		Backdraft air dampers for round ducts

Humidity sensors

Name	Photo	Description
FS2		Humidity sensor

Other accessories

Name	Photo	Description
FP 600x324x48 G4		G4 panel filter
FPT 393x235x27 G4		