

# KOMFORT Roto EC LE 2000-12 S17

Air handling units with rotary heat exchanger

- Power of electrical reheater: 12000
- Heat exchanger type: Rotary
- Heat exchanger material: Aluminum
- Sound-insulated casing
- Reheater: Electric
- Control: Wired control panel
- Casing material: Galvanized steel
- Humidity sensor: Optional
- CO2 sensor: Optional
- PM2.5 sensor: Optional

| | Unit of measurement | KOMFORT Roto EC LE 2000-12 S17 |
|---|---|---|
| Phases | - | 3 |
| Minimum supply voltage | V | 400 |
| Maximum supply voltage | V | 400 |
| Power supply frequency | Hz | 50/60 |
| Power of electrical reheater | W | 12000 |
| Maximum airflow | m³/h | 2250 |
| Heat recovery efficiency, max | % | 93 |
| Heat exchanger type | - | Rotary |
| Heat exchanger material | - | Aluminum |
| Weight | kg | 198 |
| Transported air temperature (max) | °C | 40 |
| Transported air temperature (min) | °C | -25 |
| Ambient air temperature min | °C | 1 |
| Ambient air temperature max | °C | 40 |
| Ingress protection rating | - | IP22 |
| Ingress protection rating of the drive | - | IP44 |
| Ambient air humidity max | % | 80 |

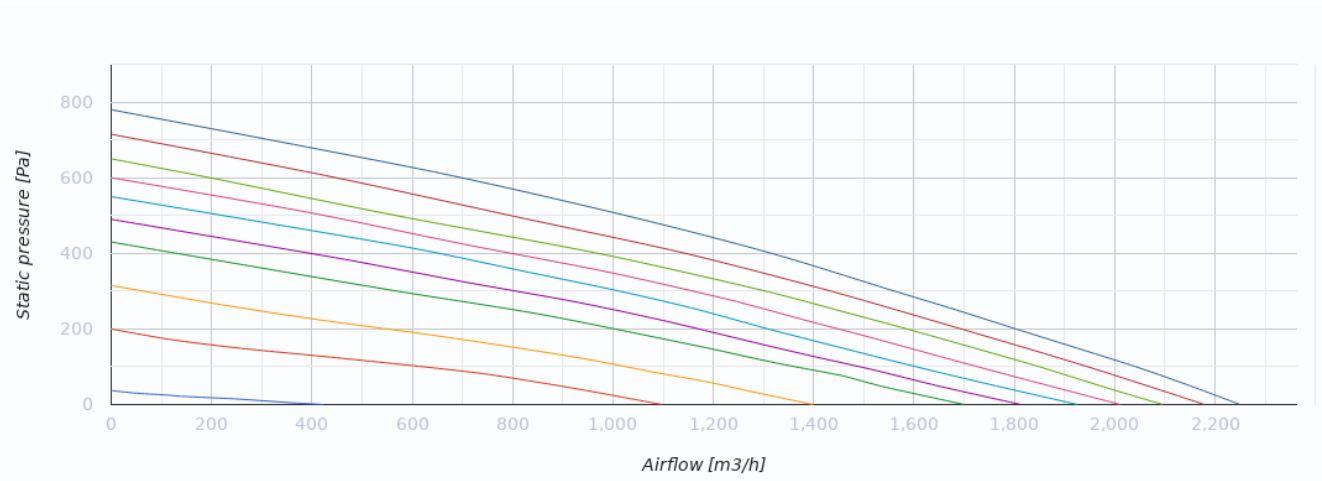


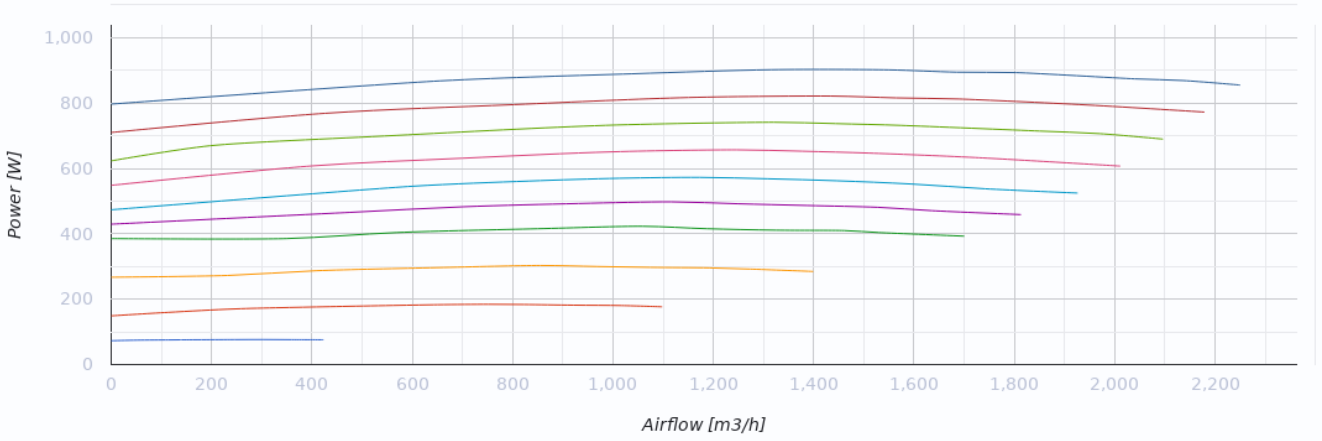


## Dimensions

| B | B1 | H | L | X | Y |
|---|---|---|---|---|---|
| 875 | 630 | 1010 | 1485 | 500 | 300 |

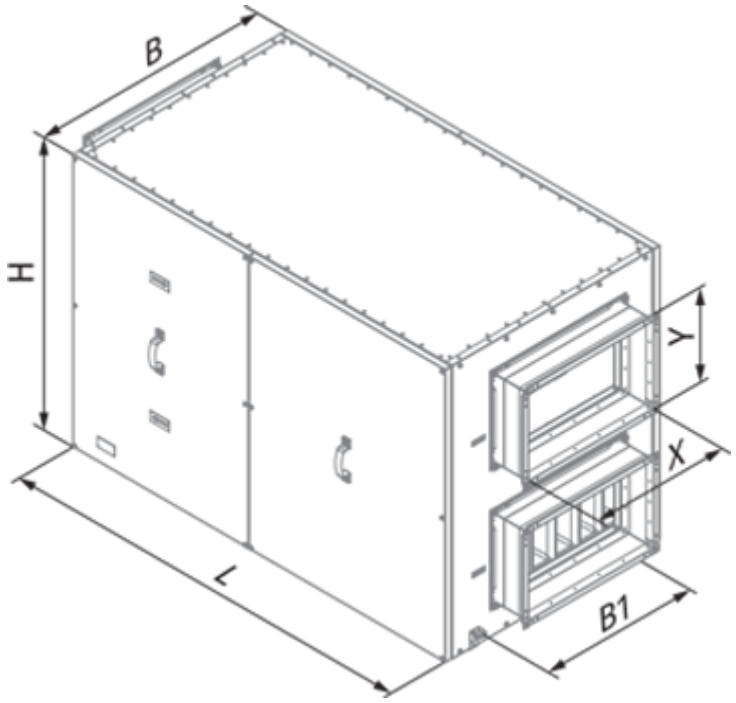


## Accessories

### For rectangular ducts

| Name | Photo | Description |
|---|---|---|
| VRVS 50x30 |  | Backdraft air dampers for rectangular ducts |
| VK 50x30 |  | Air dampers for rectangular ducts |

### Humidity sensors

| Name | Photo | Description |
|---|---|---|
| FS2 |  | Humidity sensor |

### Other accessories

| Name | Photo | Description |
|---|---|---|
| FP 800x477x47 G4 |  | G4 panel filter |

| | | |
|---|---|---|
| FPT 800x477x27 G4 | | |