

# KOMFORT Roto EC DE 651-E R S21

Air handling units with rotary heat exchanger

- Power of electrical reheater: 1400
- Heat exchanger type: Sorption rotary
- Sound-insulated casing
- Enthalpy heat exchanger
- Bypass: Auto
- Reheater: Built-in
- BMS protocol: ModBus
- Control: Smartphone
- Casing material: Coated steel
- Humidity sensor: Optional
- CO2 sensor: Optional
- PM2.5 sensor: Optional

| | Unit of measurement | KOMFORT Roto EC DE 651-E R S21 |
|---|---|---|
| Phases | - | 1 |
| Minimum supply voltage | V | 230 |
| Maximum supply voltage | V | 230 |
| Power supply frequency | Hz | 50/60 |
| Power of electrical reheater | W | 1400 |
| Maximum airflow | m³/h | 798 |
| Heat recovery efficiency, max | % | 84 |
| Heat exchanger type | - | Sorption rotary |
| Weight | kg | 104 |
| Transported air temperature (max) | °C | 40 |
| Transported air temperature (min) | °C | -25 |
| Ambient air temperature min | °C | 1 |
| Ambient air temperature max | °C | 40 |
| Ingress protection rating | - | IP22 |
| Ambient air humidity max | % | 60 |
| Ingress protection rating of the drive | - | IP44 |

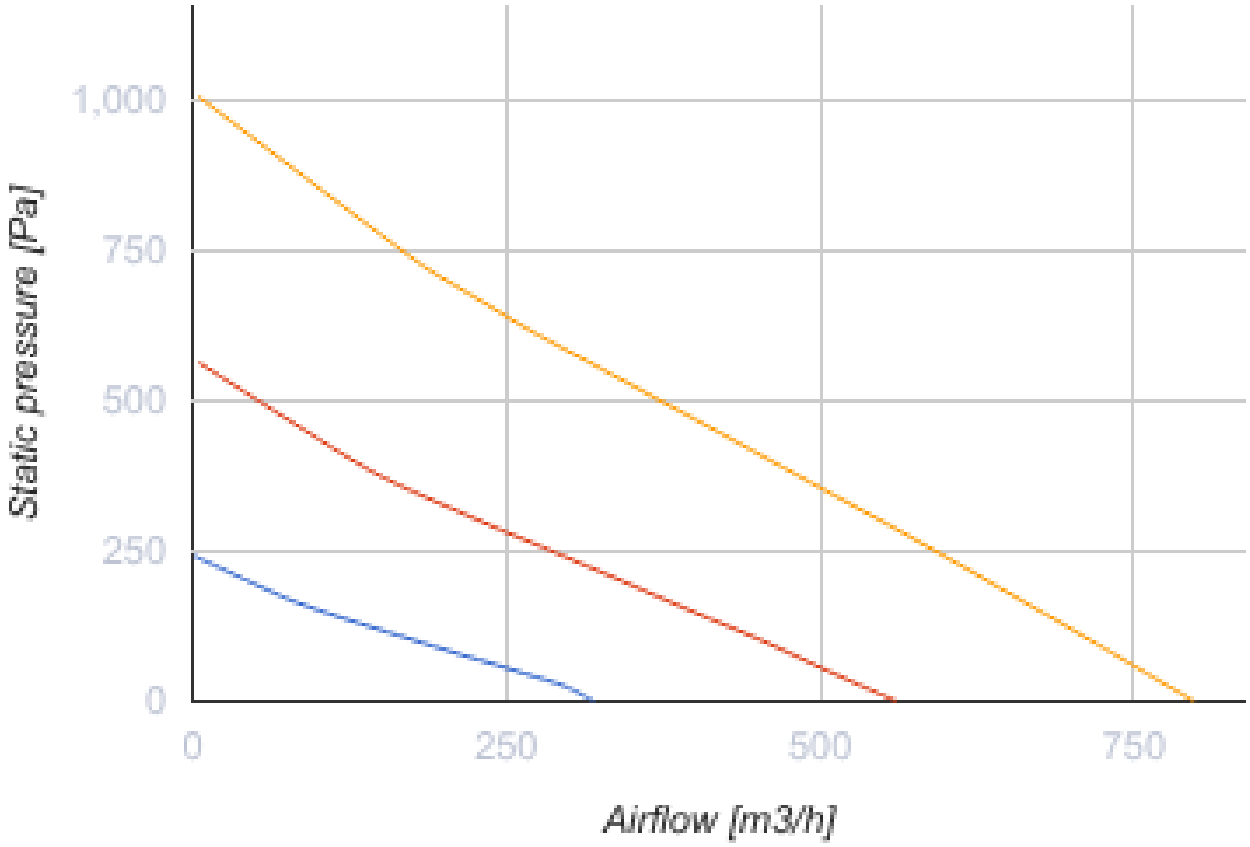


## Dimensions

| Ø D | Ø D1 | H | H1 | L | L1 | W / B | W1 / B1 |
|---|---|---|---|---|---|---|---|
| 250 | 125 | 425 | 136 | 1240 | 410 | 850 | 435 |

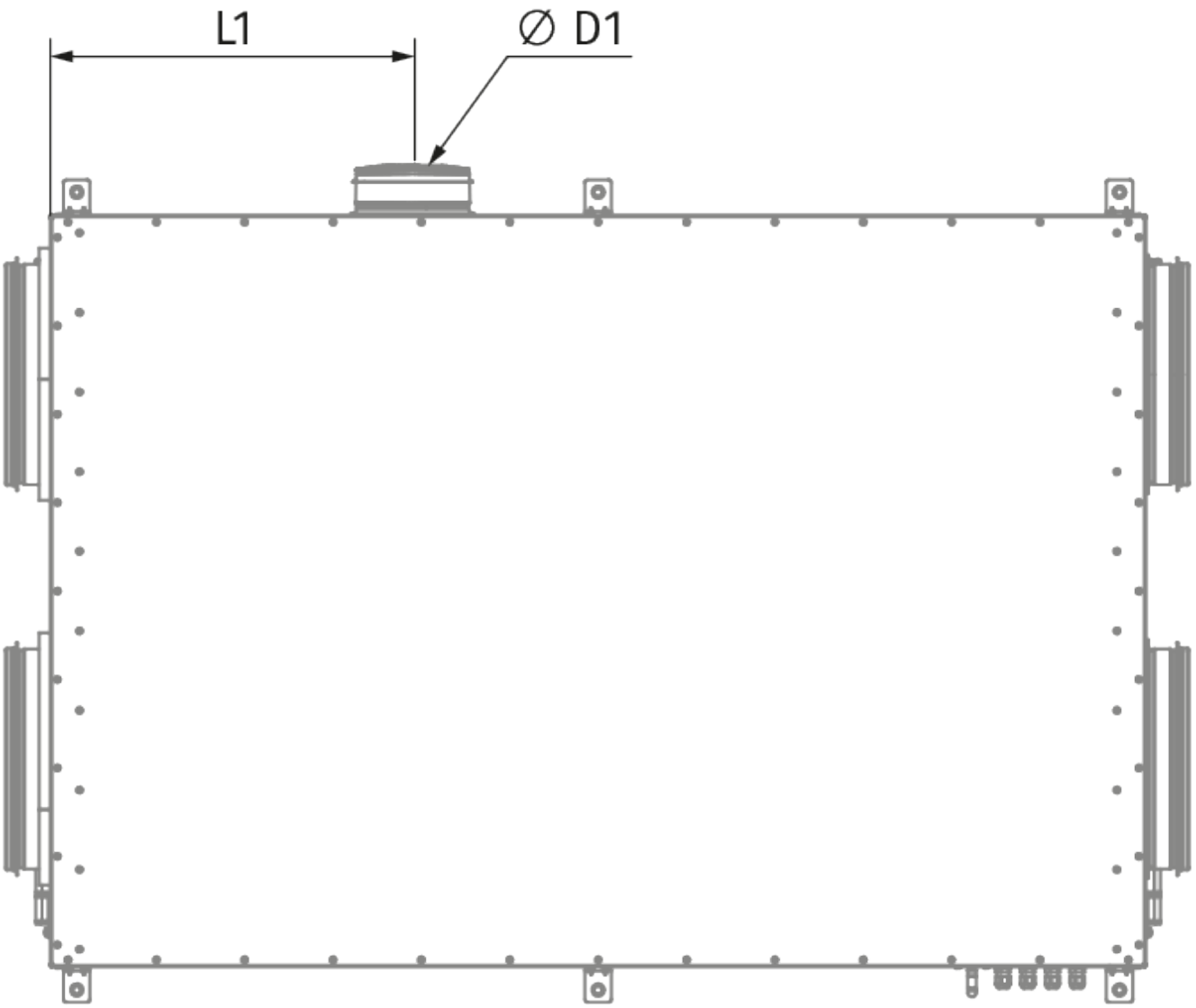
L1
∅ D1

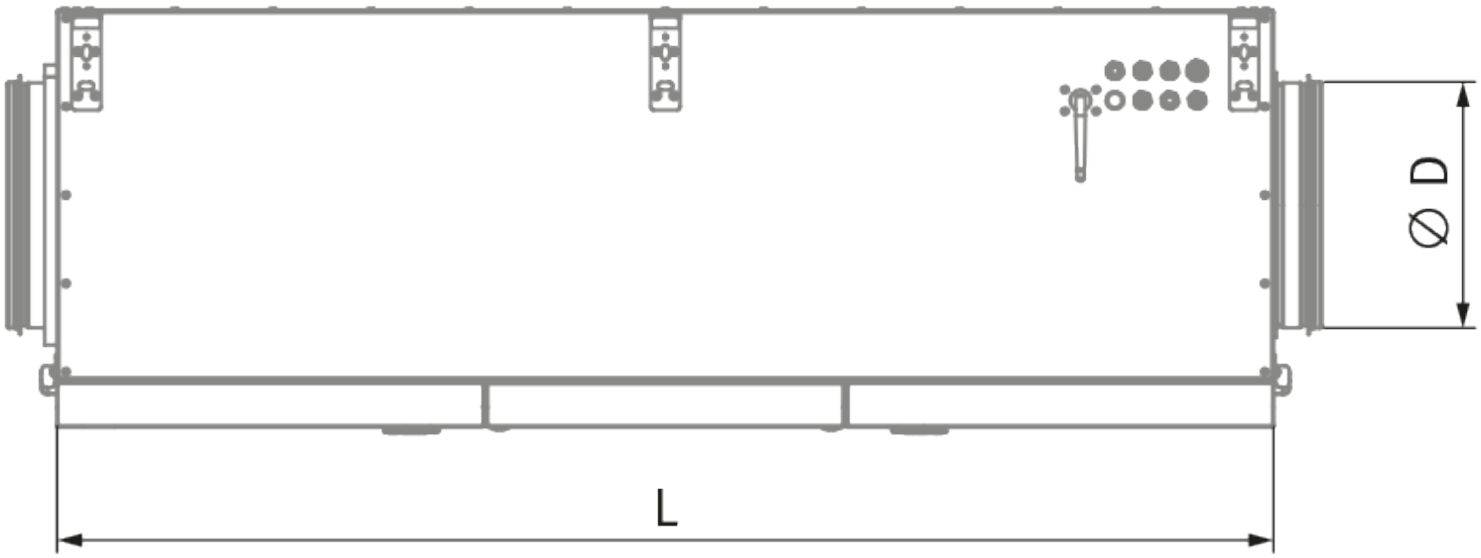
∅ D
L

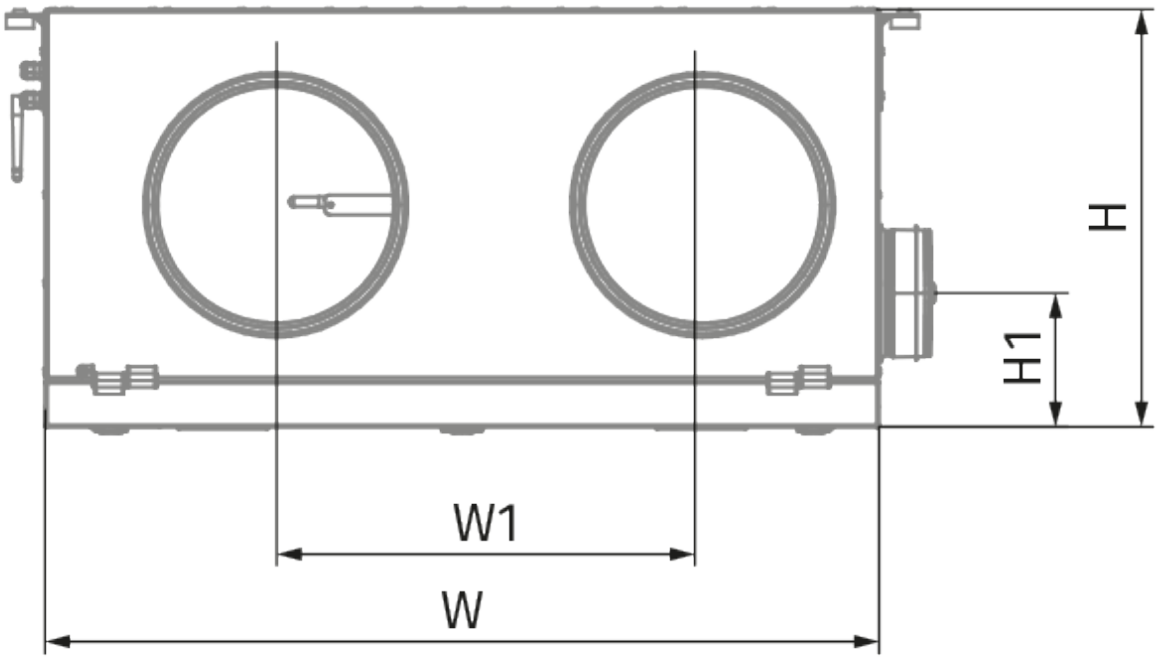
H
H1
W1
W

## Ecodesign

| | | | | | | |
|---|---|---|---|---|---|---|
| Trademark | Blauberg | | | | | |
| Model | KOMFORT Roto EC DE 651-E R S21 | | | | | |
| Specific energy consumption (SEC) (kWh/(m²/a)) | Cold | | Average | | Warm | |
| | -84.5 | A+ | -41.4 | A | -16.7 | E |
| Type of ventilation unit | Bidirectional | | | | | |
| Type of drive installed | Variable speed | | | | | |
| Type of heat recovery system | Regenerative | | | | | |
| Thermal efficiency of heat recovery (%) | 81 | | | | | |
| Maximum flow rate (m³/h) | 716 | | | | | |
| Electric power input (W) | 345 | | | | | |
| Reference flow rate (m³/s) | 0.141 | | | | | |
| Reference pressure difference (Pa) | 50 | | | | | |
| Specific power input (SPI) (W/(m³/h)) | 0.275 | | | | | |
| Control typology | Local demand control | | | | | |
| Maximum internal leakage rates (%) | 2.7 | | | | | |
| Maximum external leakage rates (%) | 2.7 | | | | | |
| Sound power level (dB(A)) | 51 | | | | | |
| The annual electricity consumption (AEC) (kWh/a) | Cold | | Average | | Warm | |
| | 145 | | 145 | | 145 | |
| The annual heating saved (AHS) (kWh/a) | Cold | | Average | | Warm | |
| | 8817 | | 4507 | | 2038 | |

## Accessories

### For round ducts

| Name | Photo | Description |
|---|---|---|
| SD 250/600 |  | Silencers for round ducts |
| SD 250/900 |  | Silencers for round ducts |

| | | |
|---|---|---|
| SD 250/1200 |  | Silencers for round ducts |

### For round ducts

| Name | Photo | Description |
|---|---|---|
| VKA 250 |  | Air dampers for round ducts |

### Control Panels

| Name | Photo | Description |
|---|---|---|
| S25 |  | LCD control panel |
| S22 |  | Control panels |
| S22 Wi-Fi |  | Control panels |

### CO2 sensors

| Name | Photo | Description |
|---|---|---|
| CD-1 |  | CO2 sensors |
| CD-3 |  | Carbon dioxide sensor |

### Humidity sensors

| Name | Photo | Description |
|---|---|---|
| FS2 |  | Humidity sensor |

### Electric actuators

| Name | Photo | Description |
|---|---|---|

| | | |
|---|---|---|
| Belimo TF230 |  | Electric actuators |

### Other accessories

| Name | Photo | Description |
|---|---|---|
| FP 377x330x48 ePM1 60% F7 |  | F7 panel filter |
| FP 377x330x48 Coarse 90% G4 |  | G4 panel filter |