

KOMFORT Roto EC DE 350 R S21

Suspended heat recovery air handling units

- Power of electrical reheater: 1400
- Heat exchanger type: Rotary
- Heat exchanger material: Aluminum
- Sound-insulated casing
- Reheater: Electric
- BMS protocol: ModBus
- Control: Smartphone
- Casing material: Coated steel
- Humidity sensor: Optional
- CO2 sensor: Optional
- PM2.5 sensor: Optional

	Unit of measurement	KOMFORT Roto EC DE 350 R S21
Phases	-	1
Minimum supply voltage	V	230
Maximum supply voltage	V	230
Power supply frequency	Hz	50/60
Power of electrical reheater	W	1400
Maximum airflow	m³/h	430
Heat recovery efficiency, max	%	87
Heat exchanger type	-	Rotary
Heat exchanger material	-	Aluminum
Weight	kg	82
Transported air temperature (max)	°C	40
Transported air temperature (min)	°C	-25
Ambient air temperature max	°C	40
Ambient air temperature min	°C	1
Ingress protection rating	-	IP22
Ambient air humidity max	%	80
Ingress protection rating of the drive	-	IP44

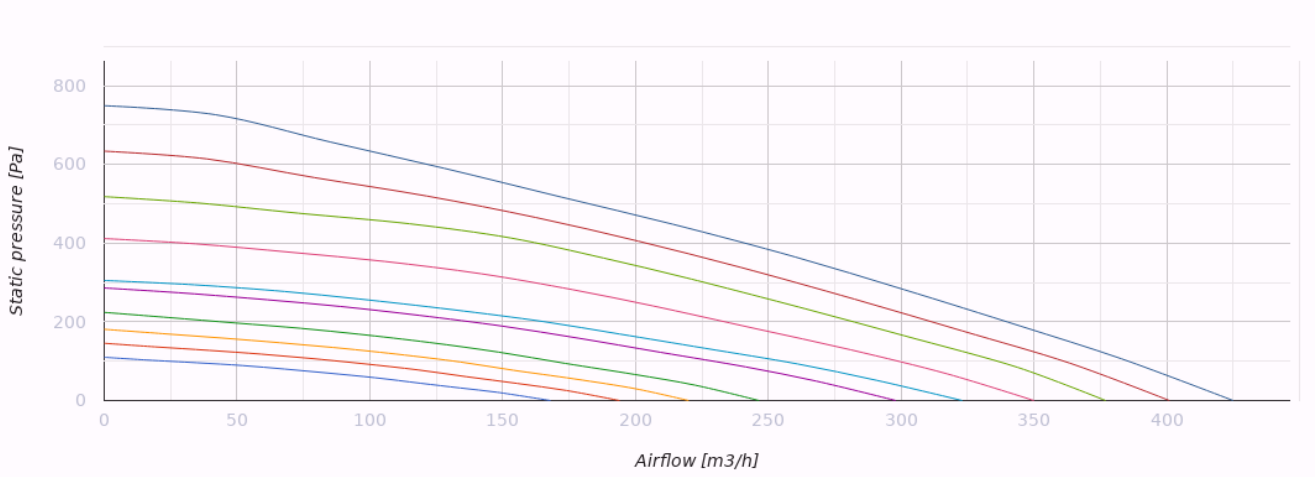

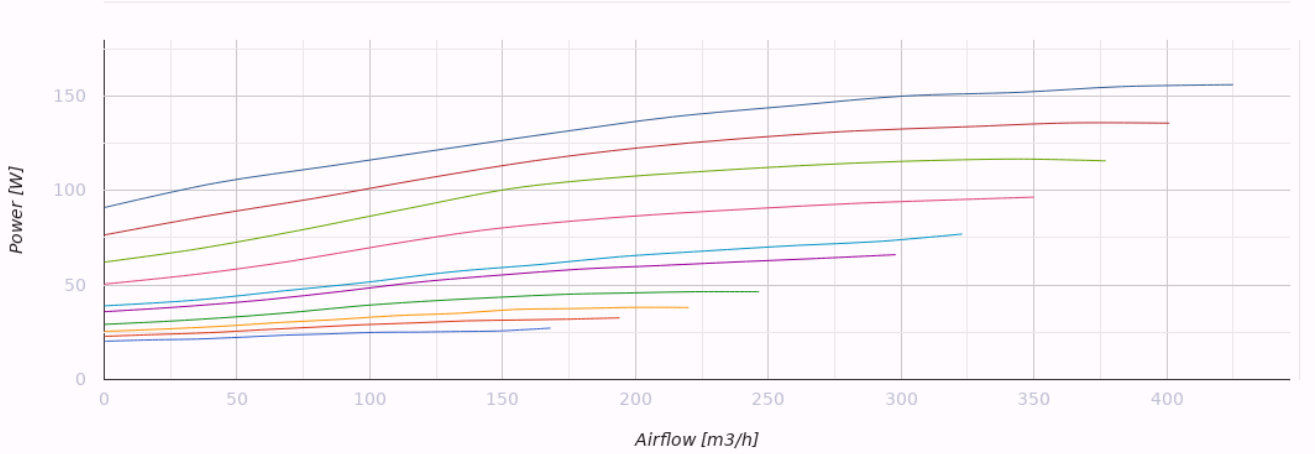

Dimensions

Ø D	Ø D1	B	B1	H	H1	L	L1
160	125	770	818	318	361	1270	1365

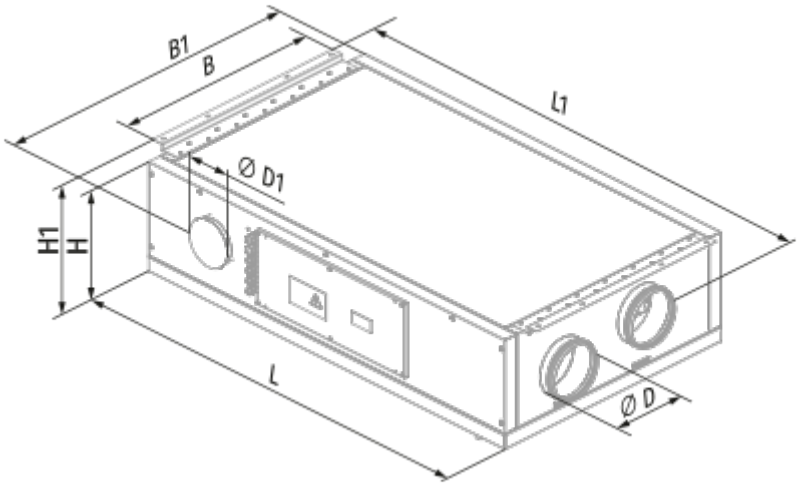

Ecodesign

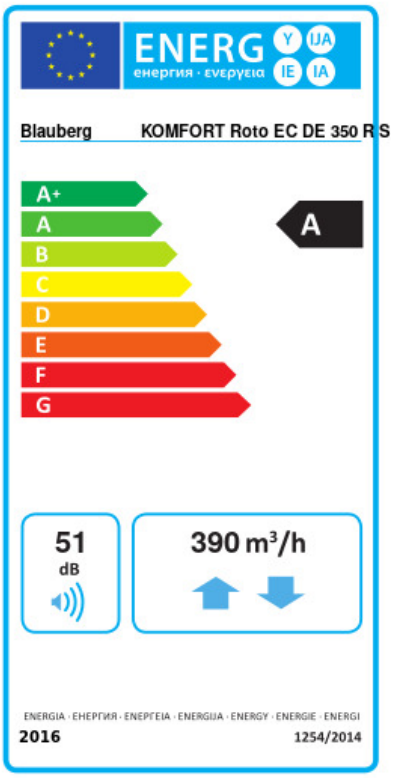

Trademark	Blauberg				
Model	KOMFORT Roto EC DE 350 R S21				
Specific energy consumption (SEC) (kWh/(m²/a))	Cold		Average		Warm	
	-83.2	A+	-40.9	A	-16.7	E
Type of ventilation unit	Bidirectional				
Type of drive installed	Variable speed				
Type of heat recovery system	Regenerative				
Thermal efficiency of heat recovery (%)	77				
Maximum flow rate (m³/h)	390				
Electric power input (W)	155				
Reference flow rate (m³/s)	0.081				
Reference pressure difference (Pa)	50				
Specific power input (SPI) (W/(m³/h))	0.252				
Control typology	Local demand control				
Maximum internal leakage rates (%)	2.7				
Maximum external leakage rates (%)	2.7				
Declared typology	RVU BVU				
Sound power level (dB(A))	51				
The annual electricity consumption (AEC) (kWh/a)	Cold		Average		Warm	
	133		133		133	
The annual heating saved (AHS) (kWh/a)	Cold		Average		Warm	
	8655		4424		2001	

Accessories

For round ducts

Name	Photo	Description
VRV 160		Backdraft dampers with spring for round ducts
VKA 160		Air dampers for round ducts

Cooker Hoods

Name	Photo	Description
DAH 251-13		Kitchen exhaust hood

Control Panels

Name	Photo	Description
S25		LCD control panel
S22		Control panels
S22 Wi-Fi		Control panels

Humidity sensors

Name	Photo	Description
FS2		Humidity sensor

Other accessories

Name	Photo	Description
FP 320x235x48 F7		F7 panel filter
FP 320x235x48 G4		G4 panel filter
FP 320x235x48 H13		Supply HEPA H13 panel filter