

KOMFORT Roto EC D2E 350 L S21

Suspended heat recovery air handling units

- Power of electrical reheater: 1400
- Heat exchanger type: Rotary
- Heat exchanger material: Aluminum
- Sound-insulated casing
- Reheater: Electric
- BMS protocol: ModBus
- Control: Smartphone
- Casing material: Coated steel
- Humidity sensor: Optional
- CO2 sensor: Optional
- PM2.5 sensor: Optional

	Unit of measurement	KOMFORT Roto EC D2E 350 L S21
Phases	-	1
Minimum supply voltage	V	230
Maximum supply voltage	V	230
Power supply frequency	Hz	50/60
Power of electrical reheater	W	1400
Maximum airflow	m³/h	400
Heat recovery efficiency, max	%	87
Heat exchanger type	-	Rotary
Heat exchanger material	-	Aluminum
Weight	kg	79
Transported air temperature (max)	°C	40
Transported air temperature (min)	°C	-25
Ambient air temperature max	°C	40
Ambient air temperature min	°C	1
Ingress protection rating	-	IP22
Ambient air humidity max	%	80
Ingress protection rating of the drive	-	IP44

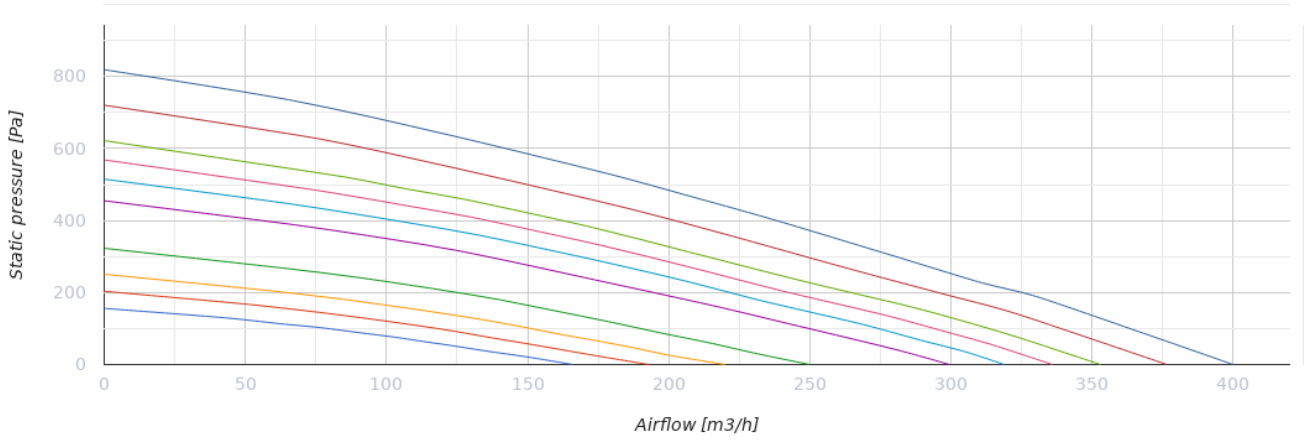

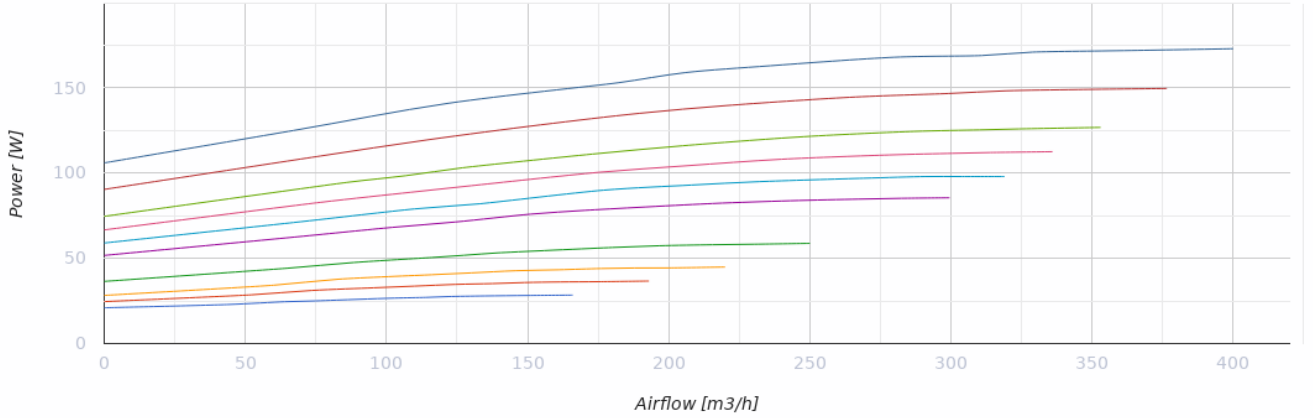

Dimensions

Ø D	Ø D1	B	B1	H	H1	L	L1
160	125	798	847	225	245	1362	1457

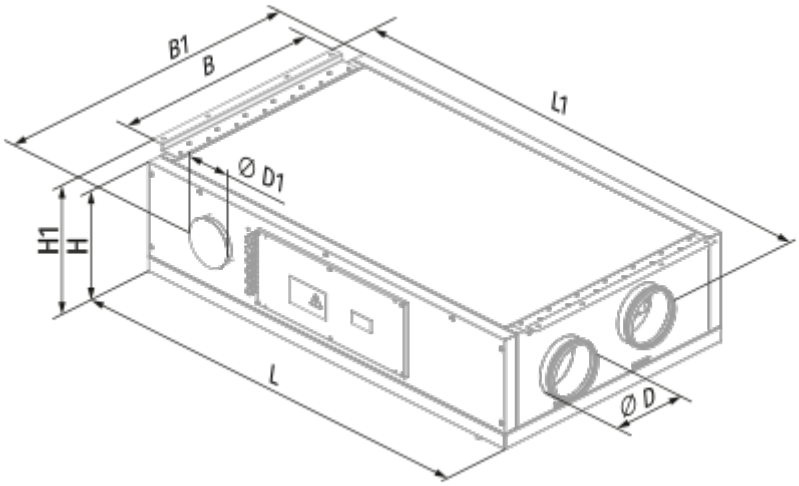

Ecodesign

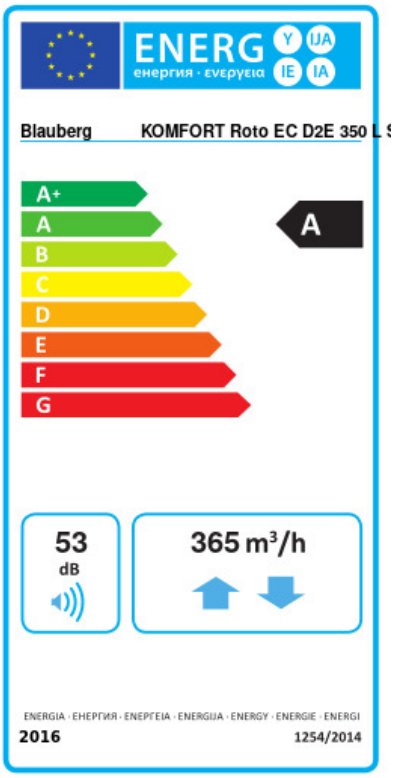

Trademark	Blauberg					
Model	KOMFORT Roto EC D2E 350 L S21					
Specific energy consumption (SEC) (kWh/(m²/a))	Cold		Average		Warm	
	-81.7	A+	-39.6	A	-15.4	E
Type of ventilation unit	Bidirectional					
Type of drive installed	Variable speed					
Type of heat recovery system	Regenerative					
Thermal efficiency of heat recovery (%)	76					
Maximum flow rate (m³/h)	365					
Electric power input (W)	173					
Reference flow rate (m³/s)	0.081					
Reference pressure difference (Pa)	50					
Specific power input (SPI) (W/(m³/h))	0.338					
Control typology	Local demand control					
Maximum internal leakage rates (%)	2.7					
Maximum external leakage rates (%)	2.7					
Declared typology	RVU BVU					
Sound power level (dB(A))	53					
The annual electricity consumption (AEC) (kWh/a)	Cold		Average		Warm	
	179		179		179	
The annual heating saved (AHS) (kWh/a)	Cold		Average		Warm	
	8614		4403		1991	

Accessories

For round ducts

Name	Photo	Description
VRV 160		Backdraft dampers with spring for round ducts
VKA 160		Air dampers for round ducts

Cooker Hoods

Name	Photo	Description
DAH 251-13		Kitchen exhaust hood

Control Panels

Name	Photo	Description
S25		LCD control panel
S22		Control panels
S22 Wi-Fi		Control panels

Humidity sensors

Name	Photo	Description
FS2		Humidity sensor

Other accessories

Name	Photo	Description
FP 372x180x48 F7		F7 panel filter
FP 372x180x48 G4		G4 panel filter
FP 372x180x48 H13		Supply HEPA H13 panel filter