

KOMFORT LE 1200-9

Heat recovery air handling units

- Power of electrical reheater: 9000
- Heat exchanger type: Cross flow
- Heat exchanger material: Polystyrene
- Sound-insulated casing
- Reheater: Electric
- Control: Wired control panel
- Casing material: Galvanized steel

	Unit of measurement	KOMFORT LE 1200-9
Phases	-	3
Minimum supply voltage	V	230
Maximum supply voltage	V	230
Power supply frequency	Hz	50/60
Power of electrical reheater	W	9000
Maximum airflow	m³/h	1200
Heat recovery efficiency, max	%	77
Heat exchanger type	-	Cross flow
Heat exchanger material	-	Polystyrene
Weight	kg	85
Transported air temperature (max)	°C	40
Transported air temperature (min)	°C	-25
Ambient air temperature min	°C	1
Ambient air temperature max	°C	40
Ingress protection rating	-	IP22
Ambient air humidity max	%	80
Ingress protection rating of the drive	-	IP44

Dimensions

ØD	B	B1	H	H1	L	L1	L2
249	613	460	698	832	1071	1117	1176

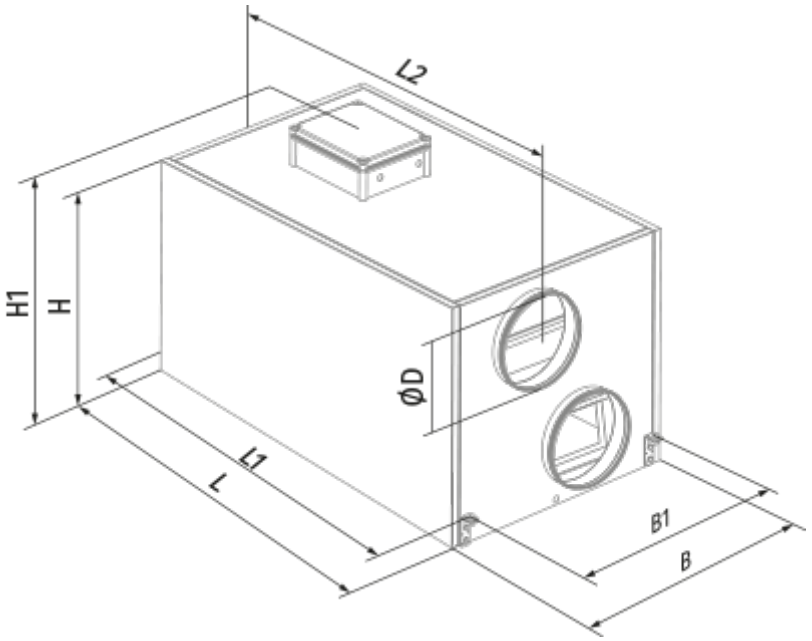

Accessories

For round ducts

Name	Photo	Description
SD 250/600		Silencers for round ducts
SD 250/900		Silencers for round ducts
SD 250/1200		Silencers for round ducts
SDF 250/600		Flexible silencers for round ducts
SDF 250/900		Flexible silencers for round ducts

SDF 250/2000		Flexible silencers for round ducts

For round ducts

Name	Photo	Description
VRV 250		Backdraft dampers with spring for round ducts

Other accessories

Name	Photo	Description
FP 550x253x48 G4		G4 panel filter
SB C4 300/384		