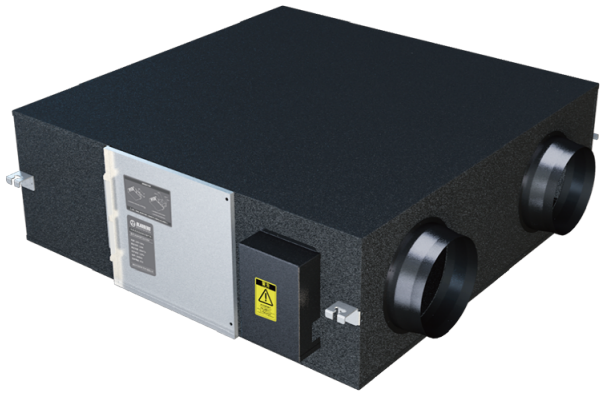

KOMFORT GRE EC 800

The KOMFORT GRE series total heat recovery unit is designed specifically for ultra-low energy consumption buildings

- Heat exchanger type: Counter flow
- Sound-insulated casing
- Enthalpy heat exchanger
- Bypass: Auto
- Preheater: Optional
- Casing material: Galvanized steel
- Humidity sensor
- CO2 sensor
- PM2.5 sensor
- Temperature sensor

	Unit of measurement	KOMFORT GRE EC 800
Minimum supply voltage	V	220
Maximum supply voltage	V	220
Power supply frequency	Hz	50
Maximum airflow	m³/h	800
Heat recovery efficiency, max	%	70.3
Heat exchanger type	-	Counter flow
Weight	kg	74

Dimensions

L	W	H	A	B	C	D	E	F	G	J	K	M
1140	1130	390	1070	1310	285	578	285	578	245	1185	1340	195

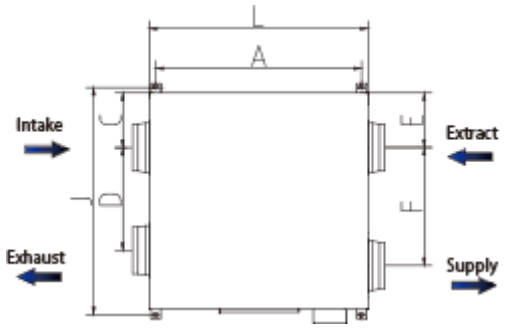

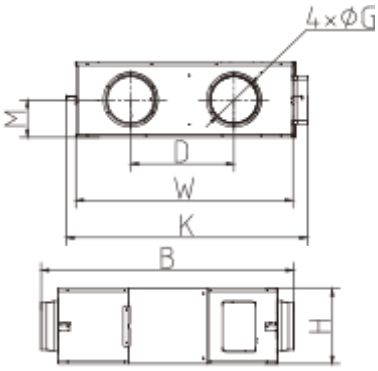
4×ØG
M
D
W
K
B
H