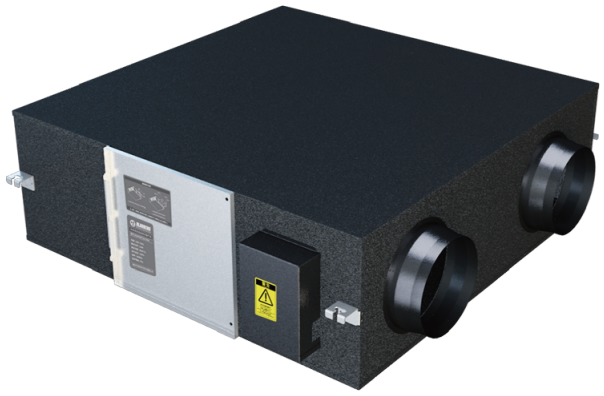

# KOMFORT GRE EC 1000

The KOMFORT GRE series total heat recovery unit is designed specifically for ultra-low energy consumption buildings

- Heat exchanger type: Counter flow
- Sound-insulated casing
- Enthalpy heat exchanger
- Bypass: Auto
- Preheater: Optional
- Casing material: Galvanized steel
- Humidity sensor
- CO2 sensor
- PM2.5 sensor
- Temperature sensor

| | Unit of measurement | KOMFORT GRE EC 1000 |
|---|---|---|
| Maximum supply voltage | V | 220 |
| Minimum supply voltage | V | 220 |
| Power supply frequency | Hz | 50 |
| Maximum airflow | m³/h | 1000 |
| Heat recovery efficiency, max | % | 70.5 |
| Heat exchanger type | - | Counter flow |
| Weight | kg | 84 |

## Dimensions

| L | W | H | A | B | C | D | E | F | G | J | K | M |
|---|---|---|---|---|---|---|---|---|---|---|---|---|
| 1140 | 1375 | 390 | 1070 | 1310 | 385 | 680 | 285 | 680 | 245 | 1430 | 1585 | 195 |

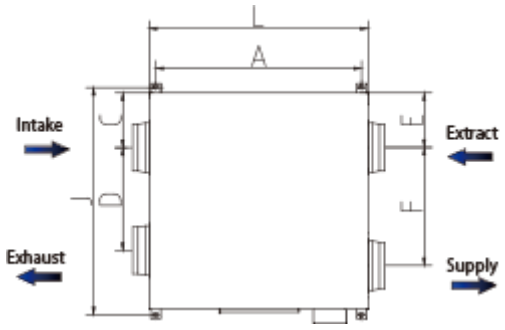

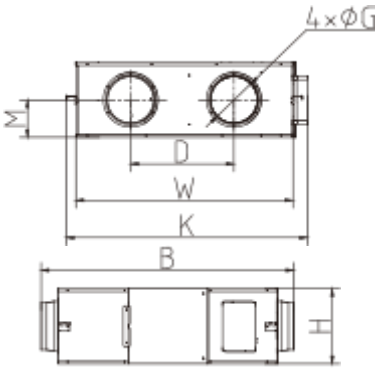
4×ØG
M
D
W
K
B
H