

KOMFORT ERV EC DB 150 L S14

Suspended heat and energy recovery air handling units

- Heat exchanger type: Cross flow
- Heat exchanger material: Enthalpy
- Sound-insulated casing
- Enthalpy heat exchanger
- Bypass: Manual
- Control: Wired control panel
- Casing material: Coated steel
- Humidity sensor: Optional
- CO2 sensor: Optional

	Unit of measurement	KOMFORT ERV EC DB 150 L S14
Phases	-	1
Minimum supply voltage	V	230
Maximum supply voltage	V	230
Power supply frequency	Hz	50/60
Maximum airflow	m³/h	215
Heat recovery efficiency, max	%	82
Heat exchanger type	-	Cross flow
Heat exchanger material	-	Enthalpy
Weight	kg	26
Transported air temperature (max)	°C	40
Transported air temperature (min)	°C	-15
Ambient air temperature min	°C	1
Ambient air temperature max	°C	40
Ingress protection rating	-	IP22
Ambient air humidity max	%	60
Ingress protection rating of the drive	-	IP44

Dimensions

D	B	H	L	L1
100	704	222	854	987

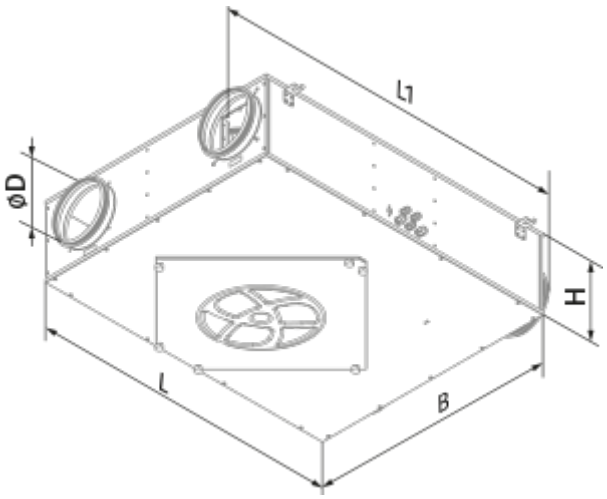

Ecodesign

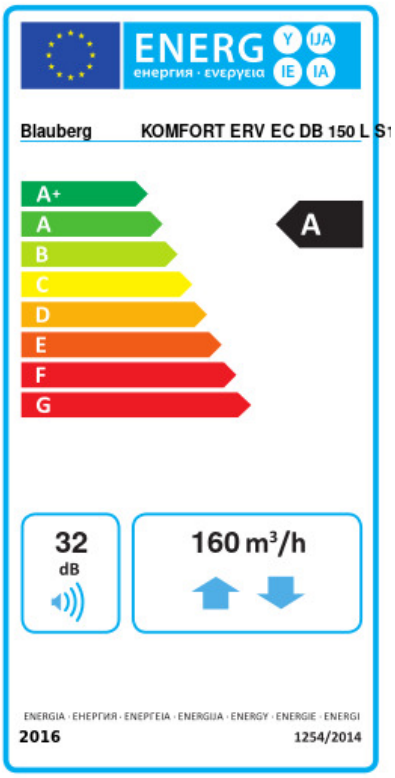

Trademark	Blauberg					
Model	KOMFORT ERV EC DB 150 L S14					
Specific energy consumption (SEC) (kWh/(m²/a))	Cold		Average		Warm	
	-75.8	A+	-39.3	A	-15.7	E
Type of ventilation unit	Bidirectional					
Type of drive installed	Variable speed					
Type of heat recovery system	Recuperative					
Thermal efficiency of heat recovery (%)	75					
Maximum flow rate (m³/h)	160					
Electric power input (W)	73					
Reference flow rate (m³/s)	0.033					
Reference pressure difference (Pa)	50					
Specific power input (SPI) (W/(m³/h))	0.308					
Control typology	Local demand control					
Maximum internal leakage rates (%)	2.7					
Maximum external leakage rates (%)	2.7					
Declared typology	RVU BVU					
Sound power level (dB(A))	32					
The annual electricity consumption (AEC) (kWh/a)	Cold		Average		Warm	
	745		208		163	
The annual heating saved (AHS) (kWh/a)	Cold		Average		Warm	
	8574		4383		1982	

Accessories

For round ducts

Name	Photo	Description
VKA 100		Air dampers for round ducts

CO2 sensors

Name	Photo	Description

CD-1		CO2 sensors
CD-2		CO2 sensors

Humidity sensors

Name	Photo	Description
FS2		Humidity sensor

Other accessories

Name	Photo	Description
FP 300x220x48 F8		F8 filter
FP 300x220x48 G4		G4 panel filter