



# KOMFORT ERV D 300 R S3

Suspended heat and energy recovery air handling units

- Heat exchanger type: Cross flow
- Heat exchanger material: Enthalpy
- Sound-insulated casing
- Enthalpy heat exchanger
- Control: Speed switch
- Casing material: Coated steel

| | Unit of measurement | KOMFORT ERV D 300 R S3 |
|---|---|---|
| Phases | - | 1 |
| Minimum supply voltage | V | 230 |
| Maximum supply voltage | V | 230 |
| Power supply frequency | Hz | 50 |
| Maximum airflow | m³/h | 340 |
| Heat recovery efficiency, max | % | 87 |
| Heat exchanger type | - | Cross flow |
| Heat exchanger material | - | Enthalpy |
| Weight | kg | 27 |
| Transported air temperature (max) | °C | 40 |
| Transported air temperature (min) | °C | -15 |
| Ambient air temperature max | °C | 40 |
| Ingress protection rating | - | IP22 |
| Ambient air humidity max | % | 60 |
| Ingress protection rating of the drive | - | IP44 |

## Dimensions

| D | B | H | L |
|---|---|---|---|
| 150 | 704 | 227 | 854 |

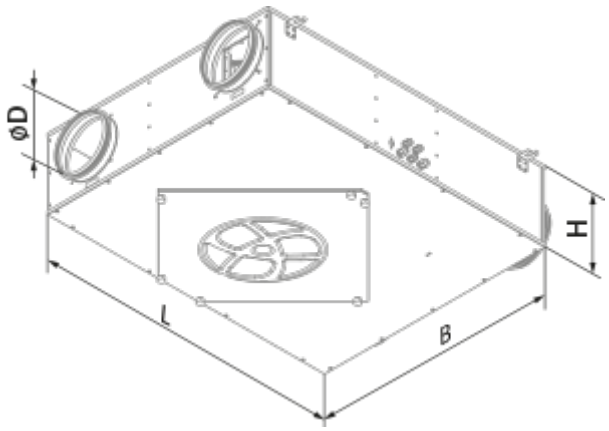

## Ecodesign

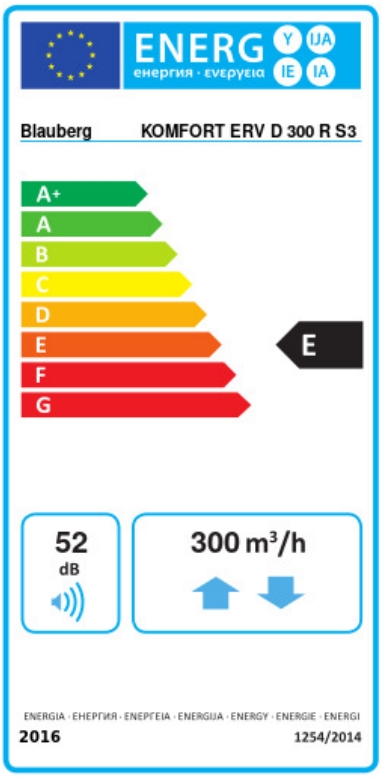


| | | | | | | |
|---|---|---|---|---|---|---|
| Trademark | Blauberg | | | | | |
| Model | KOMFORT ERV D 300 R S3 | | | | | |
| Specific energy consumption (SEC) (kWh/(m²/a)) | Cold | | Average | | Warm | |
| | -50.2 | A+ | -17.9 | E | 3.3 | G |
| Type of ventilation unit | Bidirectional | | | | | |
| Type of drive installed | Variable speed | | | | | |
| Type of heat recovery system | Recuperative | | | | | |
| Thermal efficiency of heat recovery (%) | 70 | | | | | |
| Maximum flow rate (m³/h) | 300 | | | | | |
| Electric power input (W) | 190 | | | | | |
| Reference flow rate (m³/s) | 0.056 | | | | | |
| Reference pressure difference (Pa) | 50 | | | | | |
| Specific power input (SPI) (W/(m³/h)) | 0.675 | | | | | |
| Control typology | Manual control | | | | | |
| Maximum internal leakage rates (%) | 2.7 | | | | | |
| Maximum external leakage rates (%) | 2.7 | | | | | |
| Sound power level (dB(A)) | 52 | | | | | |
| Declared typology | RVU BVU | | | | | |
| The annual electricity consumption (AEC) (kWh/a) | Cold | | Average | | Warm | |
| | 1428 | | 891 | | 846 | |
| The annual heating saved (AHS) (kWh/a) | Cold | | Average | | Warm | |
| | 7717 | | 3945 | | 1784 | |

## Accessories

### Other accessories

| Name | Photo | Description |
|---|---|---|
| FP 300x220x48 F8 |  | F8 filter |
| FP 300x220x48 G4 |  | G4 panel filter |

| | | |
|---|---|---|
| SB C4 300/270 | | |