

KOMFORT ERV D 200 L S4

Suspended heat and energy recovery air handling units

- Heat exchanger type: Cross flow
- Heat exchanger material: Enthalpy
- Sound-insulated casing
- Enthalpy heat exchanger
- Control: Speed switch
- Casing material: Coated steel

	Unit of measurement	KOMFORT ERV D 200 L S4
Phases	-	1
Minimum supply voltage	V	230
Maximum supply voltage	V	230
Power supply frequency	Hz	50
Maximum airflow	m³/h	280
Heat recovery efficiency, max	%	87
Heat exchanger type	-	Cross flow
Heat exchanger material	-	Enthalpy
Weight	kg	24
Transported air temperature (max)	°C	40
Transported air temperature (min)	°C	-5
Ambient air temperature max	°C	40
Ambient air temperature min	°C	1
Ingress protection rating	-	IP22
Ingress protection rating of the drive	-	IP44
Ambient air humidity max	%	60

Dimensions

D	B	H	L
100	704	227	854

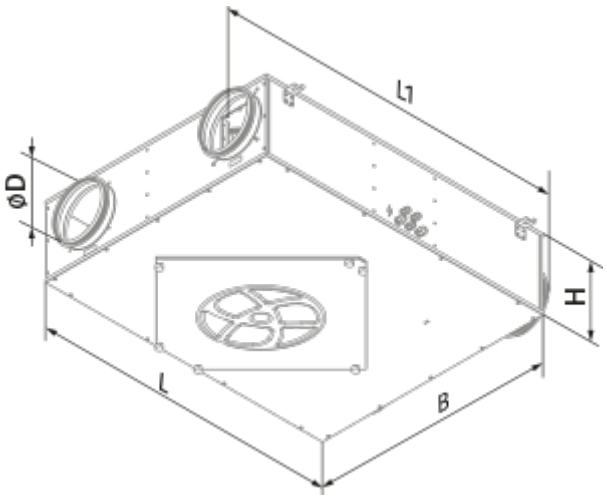

Ecodesign

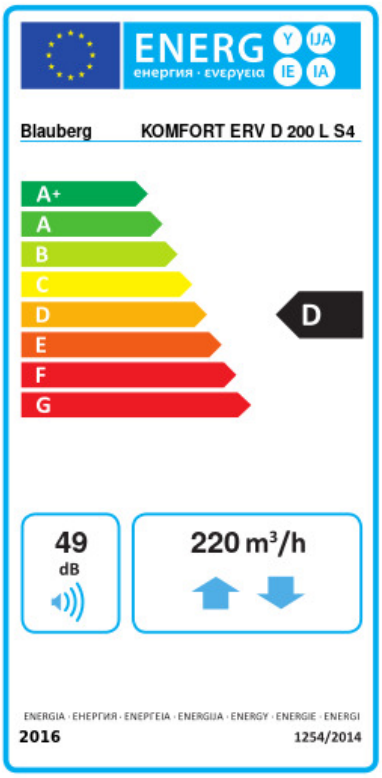

Trademark	Blauberg					
Model	KOMFORT ERV D 200 L S4					
Specific energy consumption (SEC) (kWh/(m²/a))	Cold		Average		Warm	
	-56.7	A+	-21.6	D	1.1	G
Type of ventilation unit	Bidirectional					
Type of drive installed	Variable speed					
Type of heat recovery system	Recuperative					
Thermal efficiency of heat recovery (%)	79					
Maximum flow rate (m³/h)	220					
Electric power input (W)	132					
Reference flow rate (m³/s)	0.054					
Reference pressure difference (Pa)	50					
Specific power input (SPI) (W/(m³/h))	0.646					
Control typology	Manual control					
Maximum internal leakage rates (%)	2.7					
Maximum external leakage rates (%)	2.7					
Declared typology	RVU BVU					
Sound power level (dB(A))	49					
The annual electricity consumption (AEC) (kWh/a)	Cold		Average		Warm	
	1391		854		809	
The annual heating saved (AHS) (kWh/a)	Cold		Average		Warm	
	8278		4231		1913	

Accessories

Other accessories

Name	Photo	Description
FP 300x220x48 F8		F8 filter
FP 300x220x48 G4		G4 panel filter

SB C4 300/220		