

# KOMFORT EC SB 160-E S14

Heat and humidity recovery air handling units

- Heat exchanger type: Counter flow
- Heat exchanger material: Enthalpy
- Sound-insulated casing
- Enthalpy heat exchanger
- Bypass: Manual
- Control: Wired control panel
- Casing material: Coated steel
- Humidity sensor: Optional
- CO2 sensor: Optional

| | Unit of measurement | KOMFORT EC SB 160-E S14 |
|---|---|---|
| Phases | - | 1 |
| Minimum supply voltage | V | 230 |
| Maximum supply voltage | V | 230 |
| Power supply frequency | Hz | 50/60 |
| Maximum airflow | m³/h | 200 |
| Heat recovery efficiency, max | % | 92 |
| Heat exchanger type | - | Counter flow |
| Heat exchanger material | - | Enthalpy |
| Weight | kg | 36 |
| Transported air temperature (max) | °C | 40 |
| Transported air temperature (min) | °C | -25 |
| Ambient air temperature min | °C | 1 |
| Ambient air temperature max | °C | 40 |
| Ingress protection rating | - | IP20 |
| Ingress protection rating of the drive | - | IP44 |
| Ambient air humidity max | % | 60 |

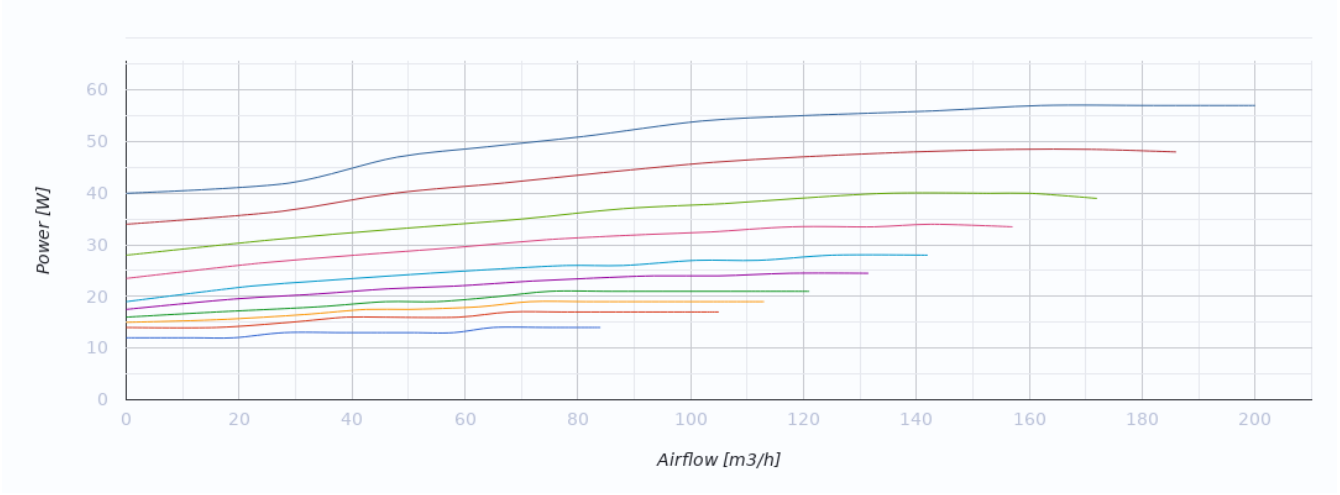


## Dimensions

| D | B | H | L |
|---|---|---|---|
| 125 | 330 | 580 | 600 |

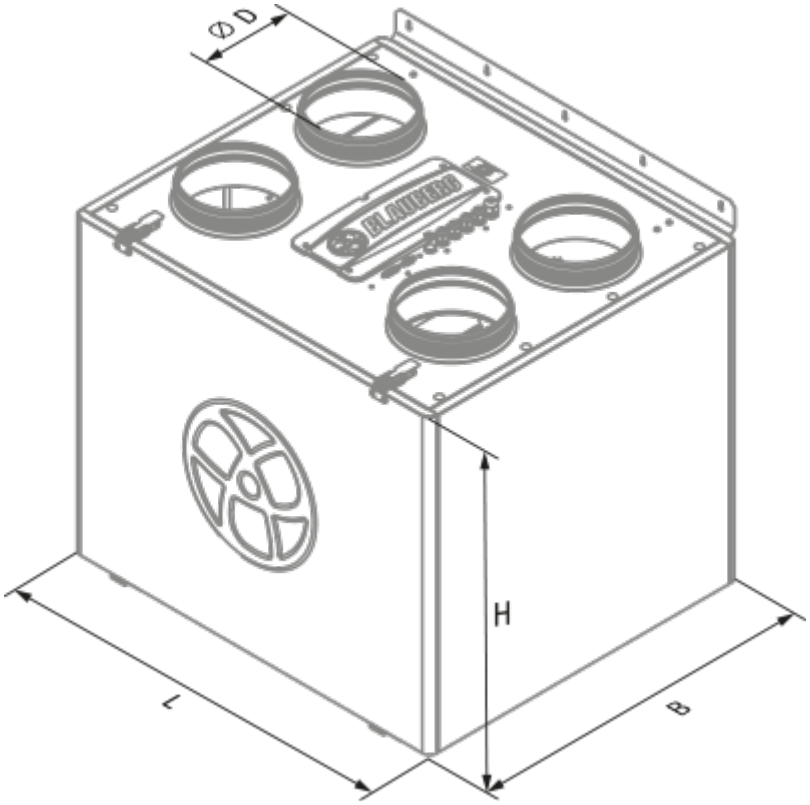

## Ecodesign

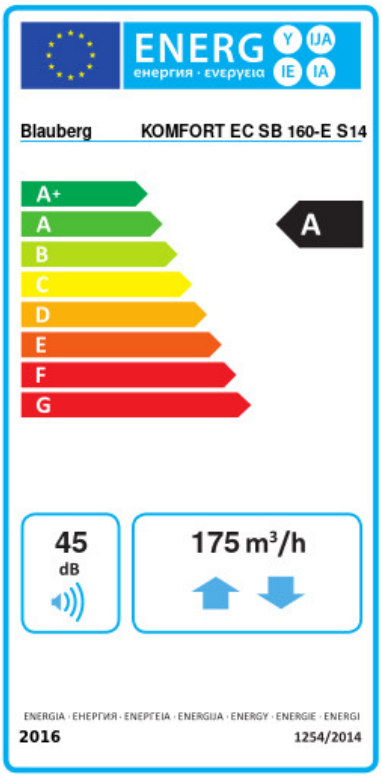


| | | | | | |
|---|---|---|---|---|---|
| Trademark | Blauberg | | | | |
| Model | KOMFORT EC SB 160-E S14 | | | | |
| Specific energy consumption (SEC) (kWh/(m²/a)) | Cold | | Average | | Warm | |
| | -78.7 | A+ | -41.4 | A | -17.3 | E |
| Type of ventilation unit | Bidirectional | | | | | |
| Type of drive installed | Variable speed | | | | | |
| Type of heat recovery system | Recuperative | | | | | |
| Thermal efficiency of heat recovery (%) | 79 | | | | | |
| Maximum flow rate (m³/h) | 175 | | | | | |
| Electric power input (W) | 57 | | | | | |
| Reference flow rate (m³/s) | 0.036 | | | | | |
| Reference pressure difference (Pa) | 50 | | | | | |
| Specific power input (SPI) (W/(m³/h)) | 0.215 | | | | | |
| Control typology | Local demand control | | | | | |
| Maximum internal leakage rates (%) | 2.7 | | | | | |
| Maximum external leakage rates (%) | 2.7 | | | | | |
| Declared typology | RVU BVU | | | | | |
| Sound power level (dB(A)) | 45 | | | | | |
| The annual electricity consumption (AEC) (kWh/a) | Cold | | Average | | Warm | |
| | 696 | | 159 | | 114 | |
| The annual heating saved (AHS) (kWh/a) | Cold | | Average | | Warm | |
| | 8736 | | 4466 | | 2019 | |

## Accessories

### For round ducts

| Name | Photo | Description |
|---|---|---|
| SD 125/600 |  | Silencers for round ducts |
| SD 125/900 |  | Silencers for round ducts |

| | | |
|---|---|---|
| SD 125/1200 |  | Silencers for round ducts |

### For round ducts

| Name | Photo | Description |
|---|---|---|
| VKA 125 |  | Air dampers for round ducts |

### CO2 sensors

| Name | Photo | Description |
|---|---|---|
| CD-1 |  | CO2 sensors |
| CD-2 |  | CO2 sensors |

### Humidity sensors

| Name | Photo | Description |
|---|---|---|
| FS2 |  | Humidity sensor |

### Other accessories

| Name | Photo | Description |
|---|---|---|
| FP 285x195x10 F7 |  | F7 panel filter |
| FP 285x195x10 G4 |  | G4 panel filter |

### Electric actuators

| Name | Photo | Description |
|---|---|---|

| | | |
|---|---|---|
| Belimo TF230 |  | Electric actuators |