

KOMFORT EC LB 700-E S21

Heat recovery air handling units

- Heat exchanger type: Counter flow
- Heat exchanger material: Enthalpy
- Sound-insulated casing
- Enthalpy heat exchanger
- Bypass: Auto
- Preheater: Optional
- Reheater: Optional
- BMS protocol: ModBus
- Control: Smartphone
- Casing material: Aluzinc
- Humidity sensor: Optional
- CO2 sensor: Optional
- PM2.5 sensor: Optional

	Unit of measurement	KOMFORT EC LB 700-E S21
Phases	-	1
Maximum supply voltage	V	230
Minimum supply voltage	V	230
Power supply frequency	Hz	50/60
Maximum airflow	m³/h	830
Heat recovery efficiency, max	%	89
Heat exchanger type	-	Counter flow
Heat exchanger material	-	Enthalpy
Weight	kg	107
Transported air temperature (max)	°C	40
Transported air temperature (min)	°C	-25
Ambient air temperature min	°C	1
Ambient air temperature max	°C	40
Ingress protection rating	-	IP22
Ambient air humidity max	%	60
Ingress protection rating of the drive	-	IP44

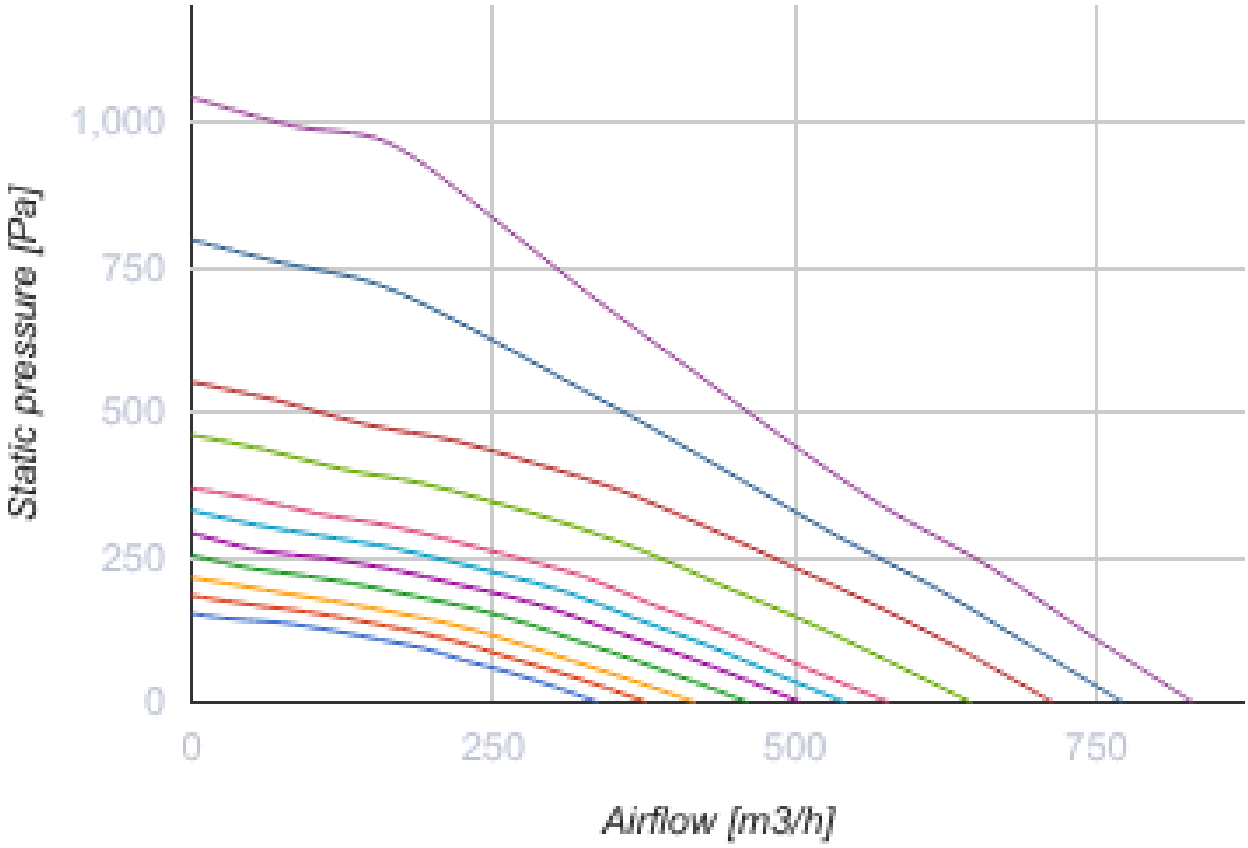
Static pressure [Pa]
1,000
750
500
250
0
0
250
500
750
Airflow [m3/h]

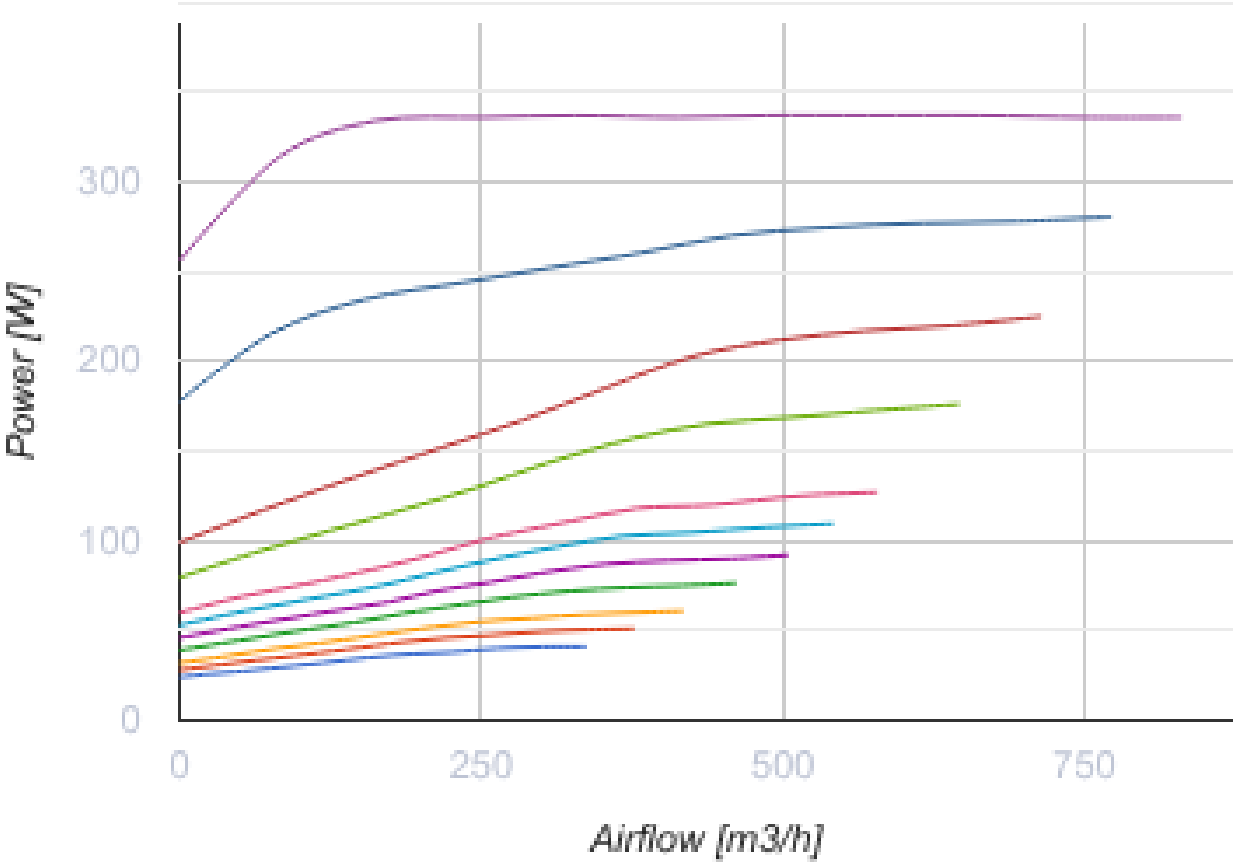

Dimensions

Ø D	B	B1	H	L	L1
247	866	700	601	1282	1379

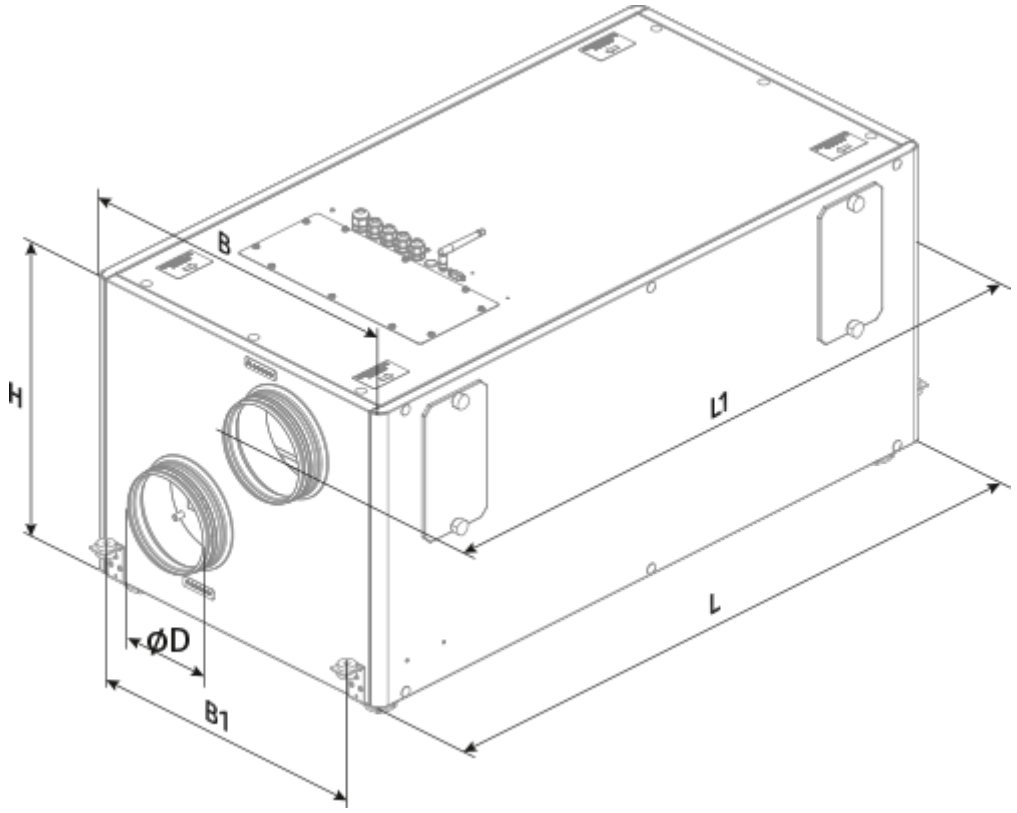
B
H
L1
L
ØD
B1

Ecodesign

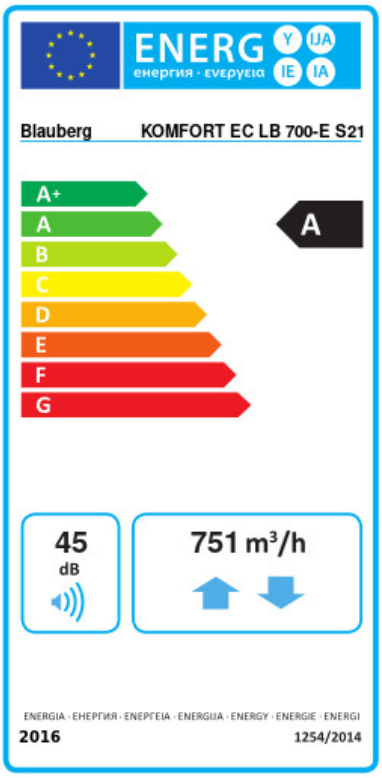

Trademark	Blauberg				
Model	KOMFORT EC LB 700-E S21				
Specific energy consumption (SEC) (kWh/(m²/a))	Cold		Average		Warm	
	-77.9	A+	-40.8	A	-16.9	E
Type of ventilation unit	Bidirectional				
Type of drive installed	Variable speed				
Type of heat recovery system	Recuperative				
Thermal efficiency of heat recovery (%)	78				
Maximum flow rate (m³/h)	751				
Electric power input (W)	336				
Reference flow rate (m³/s)	0.143				
Reference pressure difference (Pa)	50				
Specific power input (SPI) (W/(m³/h))	0.243				
Control typology	Local demand control				
Maximum internal leakage rates (%)	2.7				
Maximum external leakage rates (%)	2.7				
Declared typology	RVU BVU				
Sound power level (dB(A))	45				
The annual electricity consumption (AEC) (kWh/a)	Cold		Average		Warm	
	710		173		128	
The annual heating saved (AHS) (kWh/a)	Cold		Average		Warm	
	8695		4445		2010	

Accessories

For round ducts

Name	Photo	Description
SD 250/600		Silencers for round ducts
SD 250/900		Silencers for round ducts

SD 250/1200		Silencers for round ducts

For round ducts

Name	Photo	Description
VRV 250		Backdraft dampers with spring for round ducts
VKA 250		Air dampers for round ducts

Electrical heaters

Name	Photo	Description
EVH 250-1.2-1 S21 V.2		Electric duct preheater for heat exchanger freeze protection
EVH 250-2.0-1 S21 V.2		Electric duct preheater for heat exchanger freeze protection
EVH 250-3.0-1 S21 V.2		Electric duct preheater for heat exchanger freeze protection
ENH 250-1.2-1 S21 V.2		Duct heater for supply air reheating
ENH 250-2.0-1 S21 V.2		Duct heater for supply air reheating
ENH 250-3.0-1 S21 V.2		Duct heater for supply air reheating

Condensation drainage

Name	Photo	Description
CP-2		Drain pump

Control Panels

Name	Photo	Description

S25		LCD control panel
S22		Control panels
S22 Wi-Fi		Control panels

CO2 sensors

Name	Photo	Description
CD-1		CO2 sensors
CD-2		CO2 sensors

Humidity sensors

Name	Photo	Description
FS2		Humidity sensor

Other accessories

Name	Photo	Description
FP 784x253x48 F7		F7 panel filter
FP 784x253x48 G4		G4 panel filter

Electric actuators

Name	Photo	Description

Belimo TF230		Electric actuators