

KOMFORT EC LB 400-E S21

Heat recovery air handling units

- Heat exchanger type: Counter flow
- Heat exchanger material: Enthalpy
- Sound-insulated casing
- Enthalpy heat exchanger
- Bypass: Auto
- Reheater: Optional
- Preheater: Optional
- BMS protocol: ModBus
- Control: Smartphone
- Casing material: Aluzinc
- Humidity sensor: Optional
- CO2 sensor: Optional
- PM2.5 sensor: Optional

	Unit of measurement	KOMFORT EC LB 400-E S21
Phases	-	1
Minimum supply voltage	V	230
Maximum supply voltage	V	230
Power supply frequency	Hz	50/60
Maximum airflow	m³/h	540
Heat recovery efficiency, max	%	89
Heat exchanger type	-	Counter flow
Heat exchanger material	-	Enthalpy
Weight	kg	74.8
Transported air temperature (max)	°C	40
Transported air temperature (min)	°C	-25
Ambient air temperature min	°C	1
Ambient air temperature max	°C	40
Ingress protection rating	-	IP22
Ingress protection rating of the drive	-	IP44
Ambient air humidity max	%	60

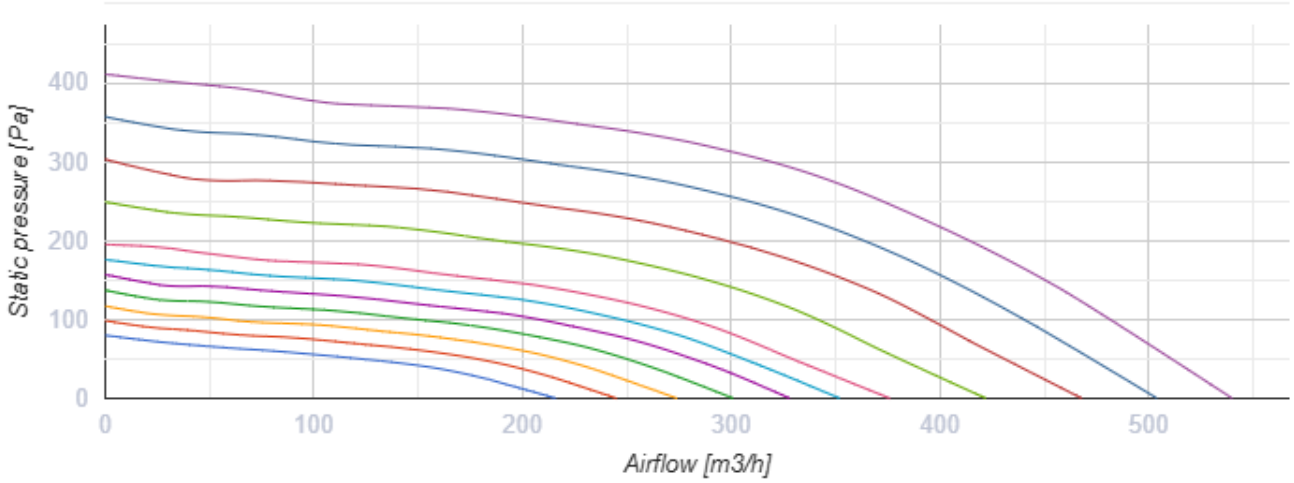

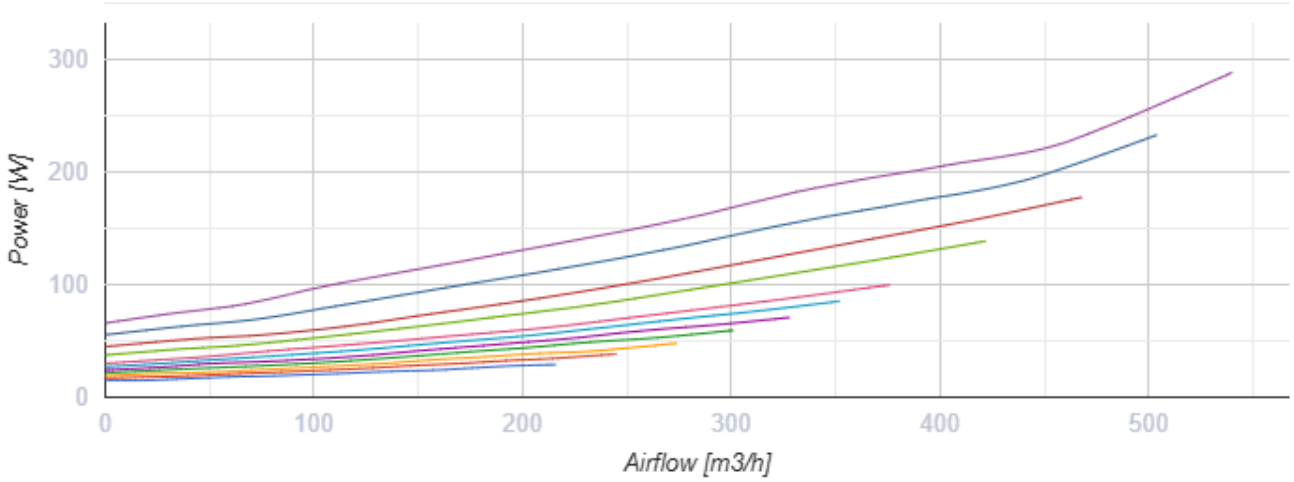

Dimensions

Ø D	B	B1	H	L	L1
197	682	596	504	1094	1191

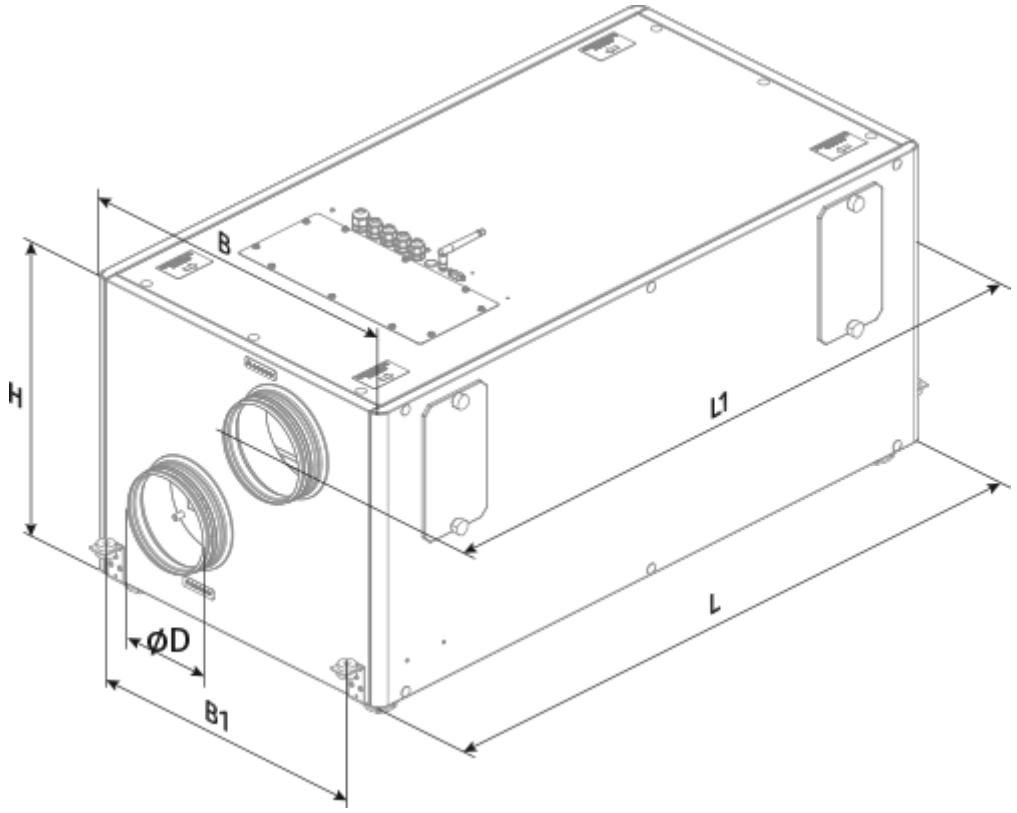
B
H
L1
L
ØD
B1

Ecodesign

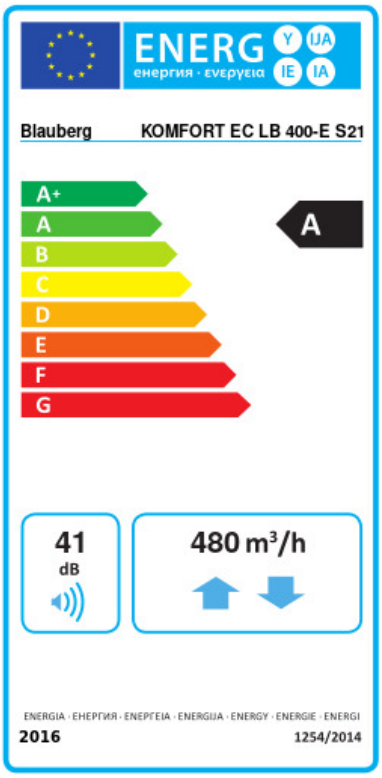

Trademark	Blauberg				
Model	KOMFORT EC LB 400-E S21				
Specific energy consumption (SEC) (kWh/(m²/a))	Cold		Average		Warm	
	-79.2	A+	-41.3	A	-16.9	E
Type of ventilation unit	Bidirectional				
Type of drive installed	Variable speed				
Type of heat recovery system	Recuperative				
Thermal efficiency of heat recovery (%)	82				
Maximum flow rate (m³/h)	480				
Electric power input (W)	240				
Reference flow rate (m³/s)	0.092				
Reference pressure difference (Pa)	50				
Specific power input (SPI) (W/(m³/h))	0.268				
Control typology	Local demand control				
Maximum internal leakage rates (%)	2.7				
Maximum external leakage rates (%)	2.7				
Declared typology	RVU BVU				
Sound power level (dB(A))	41				
The annual electricity consumption (AEC) (kWh/a)	Cold		Average		Warm	
	724		187		142	
The annual heating saved (AHS) (kWh/a)	Cold		Average		Warm	
	8857		4528		2047	

Accessories

For round ducts

Name	Photo	Description
SD 200/600		Silencers for round ducts
SD 200/900		Silencers for round ducts

SD 200/1200		Silencers for round ducts

For round ducts

Name	Photo	Description
VRV 200		Backdraft dampers with spring for round ducts
VKA 200		Air dampers for round ducts

Electrical heaters

Name	Photo	Description
EVH 200-1.2-1 S21 V.2		Electric duct preheater for heat exchanger freeze protection
EVH 200-1.7-1 S21 V.2		Electric duct preheater for heat exchanger freeze protection
EVH 200-2.0-1 S21 V.2		Electric duct preheater for heat exchanger freeze protection
ENH 200-1.2-1 S21 V.2		Duct heater for supply air reheating
ENH 200-1.7-1 S21 V.2		Duct heater for supply air reheating
ENH 200-2.0-1 S21 V.2		Duct heater for supply air reheating

Condensation drainage

Name	Photo	Description
CP-2		Drain pump

Control Panels

Name	Photo	Description

S25		LCD control panel
S22		Control panels
S22 Wi-Fi		Control panels

CO2 sensors

Name	Photo	Description
CD-1		CO2 sensors
CD-2		CO2 sensors

Humidity sensors

Name	Photo	Description
FS2		Humidity sensor

Other accessories

Name	Photo	Description
FP 600x205x48 F7		F7 panel filter
FP 600x205x48 G4		G4 panel filter

Electric actuators

Name	Photo	Description

Belimo TF230		Electric actuators