

KOMFORT EC LB 300 S21

Heat recovery air handling units

- Heat exchanger type: Counter flow
- Heat exchanger material: Polystyrene
- Sound-insulated casing
- Bypass: Auto
- Preheater: Optional
- Reheater: Optional
- BMS protocol: ModBus
- Control: Smartphone
- Casing material: Aluzinc
- Humidity sensor: Optional
- CO2 sensor: Optional
- PM2.5 sensor: Optional

	Unit of measurement	KOMFORT EC LB 300 S21
Phases	-	1
Minimum supply voltage	V	230
Maximum supply voltage	V	230
Power supply frequency	Hz	50/60
Maximum airflow	m³/h	380
Heat recovery efficiency, max	%	98
Heat exchanger type	-	Counter flow
Heat exchanger material	-	Polystyrene
Weight	kg	63.1
Transported air temperature (max)	°C	40
Transported air temperature (min)	°C	-25
Ambient air temperature min	°C	1
Ambient air temperature max	°C	40
Ingress protection rating	-	IP22
Ingress protection rating of the drive	-	IP44
Ambient air humidity max	%	60

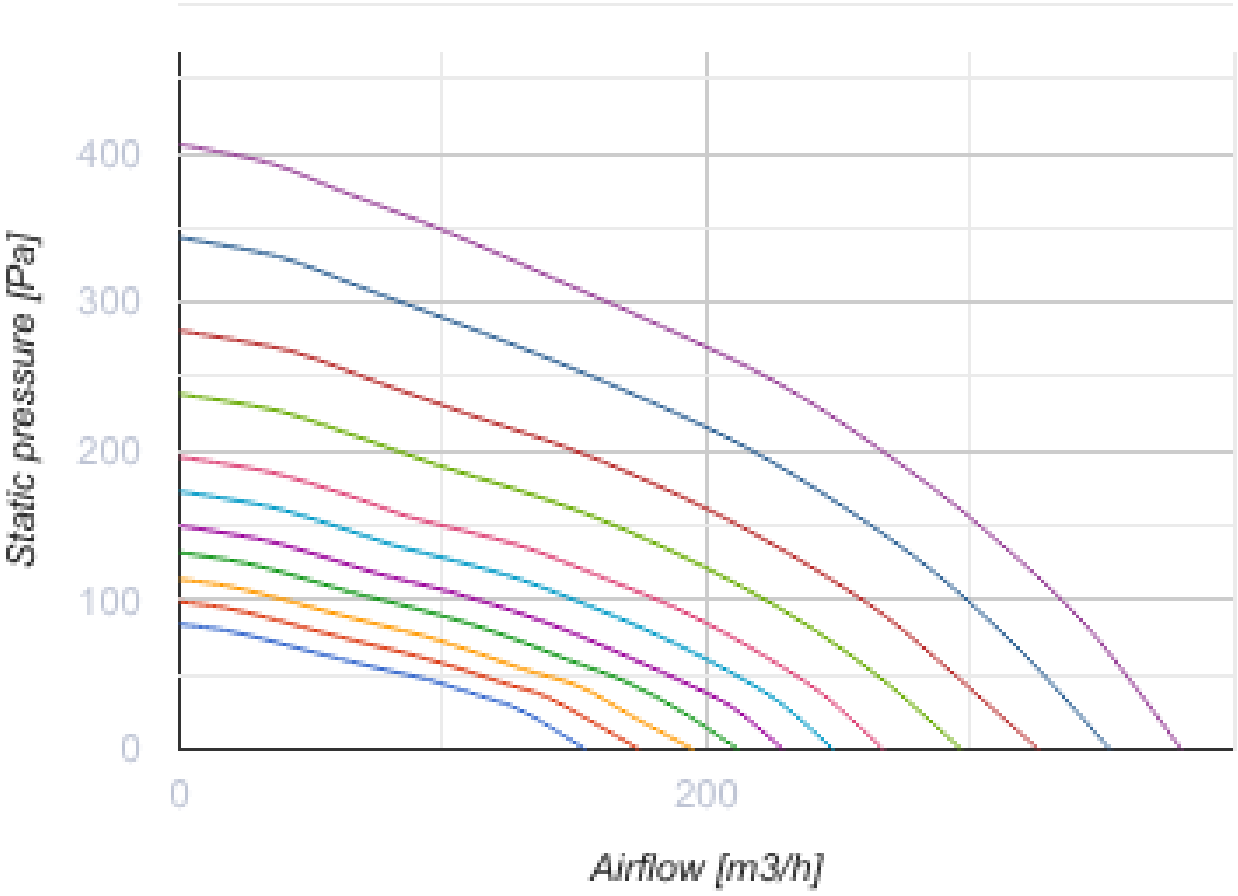
Static pressure [Pa]
400
300
200
100
0
0
200
Airflow [m3/h]

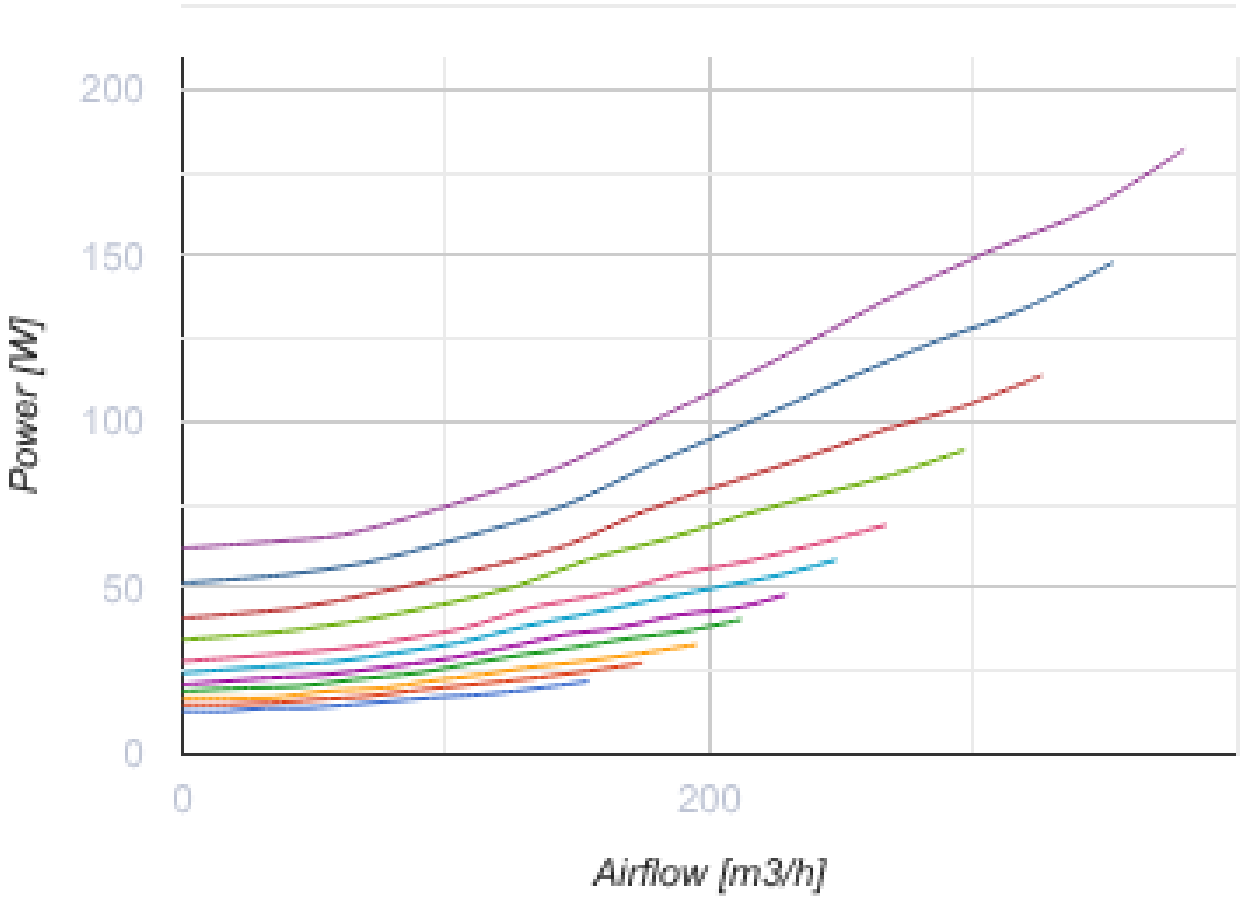

Dimensions

Ø D	B	B1	H	L	L1
157	566	480	479	1083	1180

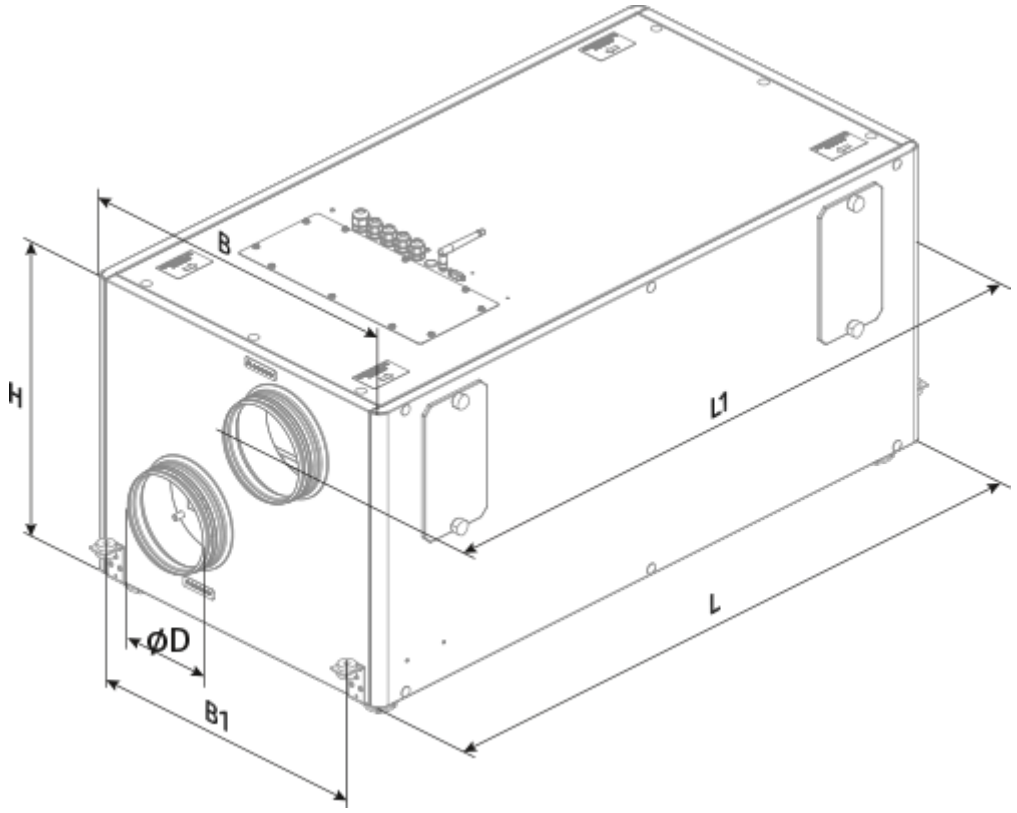
B
H
L1
L
ØD
B1

Ecodesign

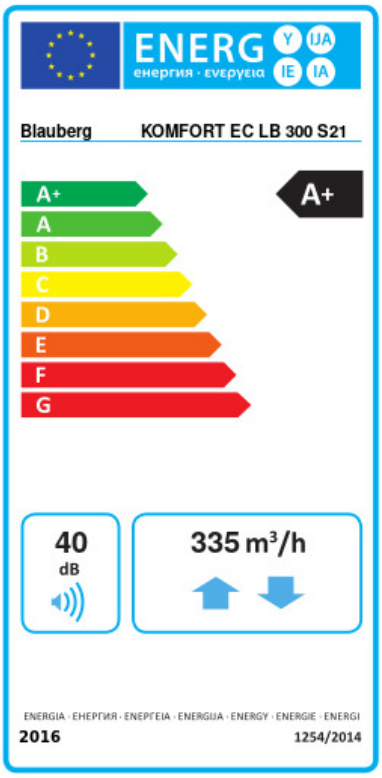

Trademark	Blauberg					
Model	KOMFORT EC LB 300 S21					
Specific energy consumption (SEC) (kWh/(m²/a))	Cold		Average		Warm	
	-81.3	A+	-42.4	A+	-17.4	E
Type of ventilation unit	Bidirectional					
Type of drive installed	Variable speed					
Type of heat recovery system	Recuperative					
Thermal efficiency of heat recovery (%)	87					
Maximum flow rate (m³/h)	335					
Electric power input (W)	155					
Reference flow rate (m³/s)	0.064					
Reference pressure difference (Pa)	50					
Specific power input (SPI) (W/(m³/h))	0.265					
Control typology	Local demand control					
Maximum internal leakage rates (%)	2.7					
Maximum external leakage rates (%)	2.7					
Declared typology	RVU BVU					
Sound power level (dB(A))	40					
The annual electricity consumption (AEC) (kWh/a)	Cold		Average		Warm	
	722		185		140	
The annual heating saved (AHS) (kWh/a)	Cold		Average		Warm	
	9060		4631		2094	

Accessories

For round ducts

Name	Photo	Description
SD 160/600		Silencers for round ducts
SD 160/900		Silencers for round ducts

SD 160/1200		Silencers for round ducts

For round ducts

Name	Photo	Description
VRV 160		Backdraft dampers with spring for round ducts
VKA 160		Air dampers for round ducts

Electrical heaters

Name	Photo	Description
EVH 160-0.8-1 S21 V.2		Electric duct preheater for heat exchanger freeze protection
EVH 160-1.2-1 S21 V.2		Electric duct preheater for heat exchanger freeze protection
EVH 160-1.7-1 S21 V.2		Electric duct preheater for heat exchanger freeze protection
EVH 160-2.0-1 S21 V.2		Electric duct preheater for heat exchanger freeze protection
ENH 160-0.8-1 S21 V.2		Duct heater for supply air reheating
ENH 160-1.2-1 S21 V.2		Duct heater for supply air reheating
ENH 160-1.7-1 S21 V.2		Duct heater for supply air reheating
ENH 160-2.0-1 S21 V.2		Duct heater for supply air reheating

Condensation drainage

Name	Photo	Description

CP-2		Drain pump

Control Panels

Name	Photo	Description
S25		LCD control panel
S22		Control panels
S22 Wi-Fi		Control panels

CO2 sensors

Name	Photo	Description
CD-1		CO2 sensors
CD-2		CO2 sensors

Humidity sensors

Name	Photo	Description
FS2		Humidity sensor

Other accessories

Name	Photo	Description
FP 484x178x48 F7		F7 panel filter

FP 484x178x48 G4		G4 panel filter

Electric actuators

Name	Photo	Description
Belimo TF230		Electric actuators