

KOMFORT EC DBE 550 R S21 DTV

Suspended heat recovery air handling units

- Power of electrical reheater: 2000
- Heat exchanger type: Counter flow
- Heat exchanger material: Polystyrene
- Sound-insulated casing
- Bypass: Auto
- Reheater: Electric
- Preheater: Optional
- BMS protocol: ModBus
- Control: Smartphone
- Casing material: Galvanized steel
- Humidity sensor: Optional
- CO2 sensor: Optional
- PM2.5 sensor: Optional

	Unit of measurement	KOMFORT EC DBE 550 R S21 DTV
Phases	-	1
Minimum supply voltage	V	230
Maximum supply voltage	V	230
Power supply frequency	Hz	50/60
Power of electrical reheater	W	2000
Maximum airflow	m³/h	608
Heat recovery efficiency, max	%	90
Heat exchanger type	-	Counter flow
Heat exchanger material	-	Polystyrene
Weight	kg	67
Transported air temperature (max)	°C	40
Transported air temperature (min)	°C	-25
Ambient air temperature max	°C	40
Ambient air temperature min	°C	1
Ingress protection rating	-	IP22
Ambient air humidity max	%	60
Ingress protection rating of the drive	-	IP44

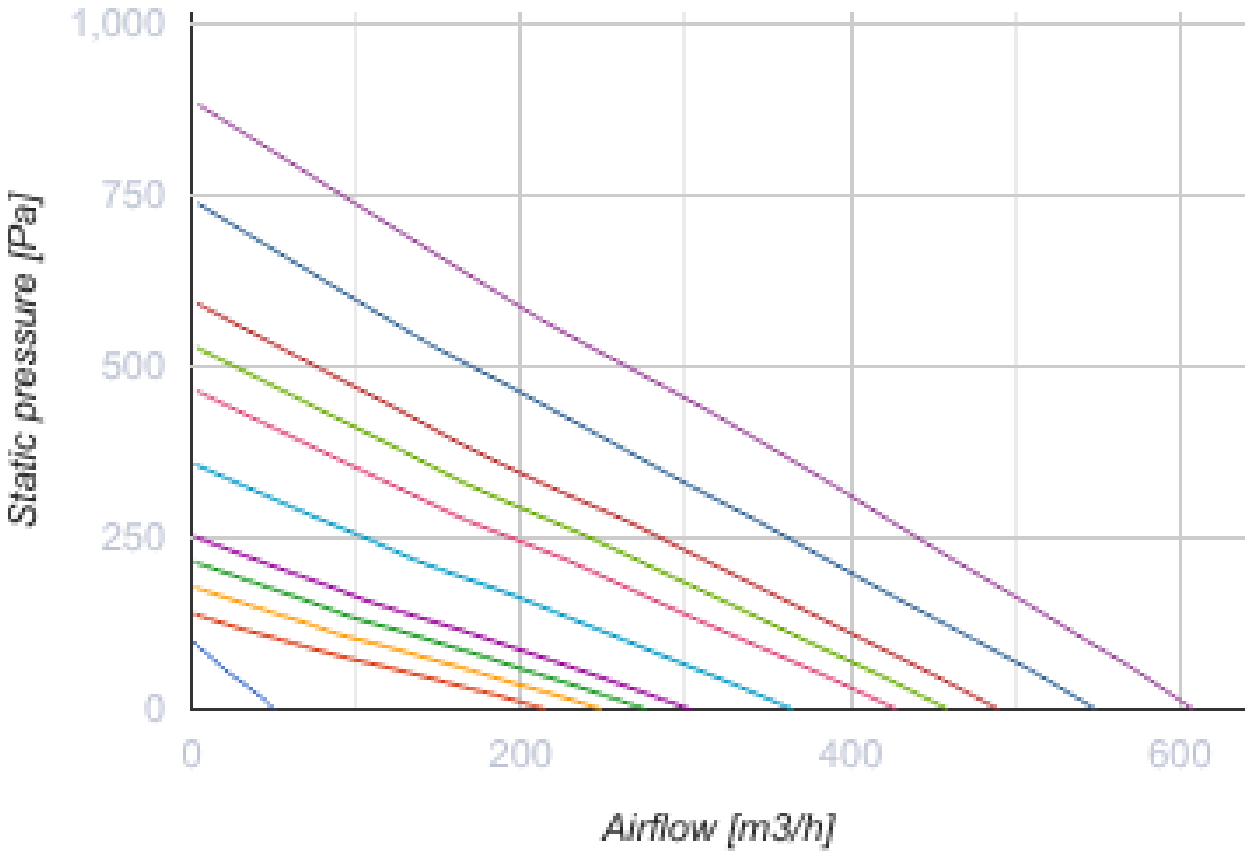
1,000
750
500
250
0
Static pressure [Pa]
0
200
400
600
Airflow [m3/h]

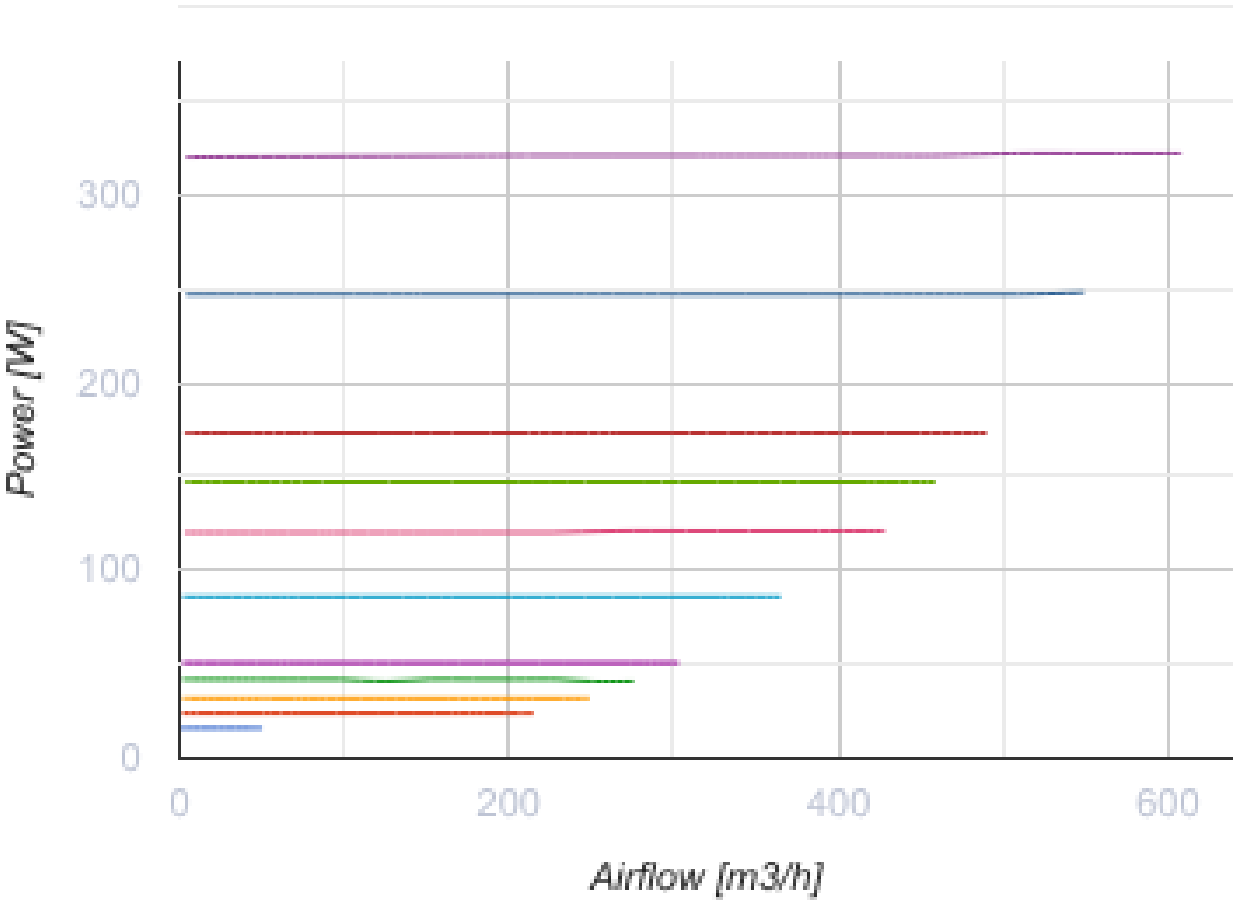

Dimensions

Ø D	B	B1	H	L	L1
200	827	960	280	1238	1291

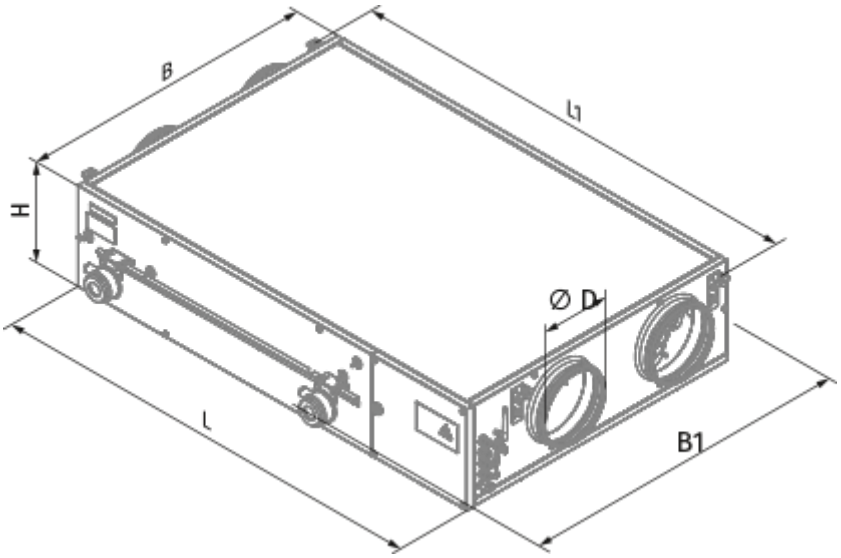
B
L1
H
Ø D
L
B1

Ecodesign

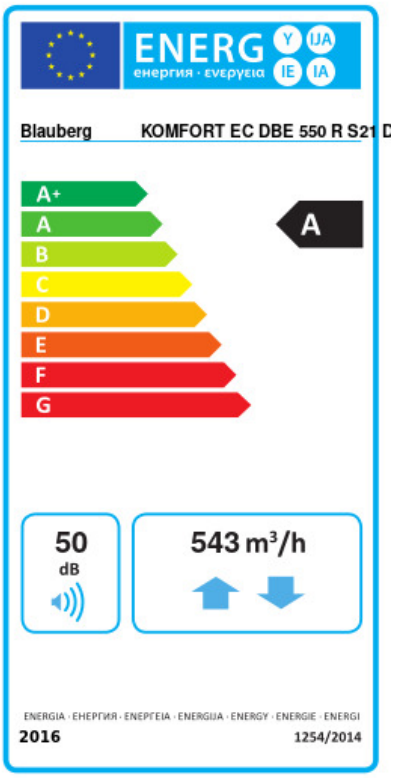

Trademark	Blauberg					
Model	KOMFORT EC DBE 550 R S21 DTV					
Specific energy consumption (SEC) (kWh/(m²/a))	Cold		Average		Warm	
	-78.2	A+	-40.4	A	-16.2	E
Type of ventilation unit	Bidirectional					
Type of drive installed	Variable speed					
Type of heat recovery system	Recuperative					
Thermal efficiency of heat recovery (%)	81					
Maximum flow rate (m³/h)	543					
Electric power input (W)	322					
Reference flow rate (m³/s)	0.106					
Reference pressure difference (Pa)	50					
Specific power input (SPI) (W/(m³/h))	0.316					
Control typology	Local demand control					
Maximum internal leakage rates (%)	2.7					
Maximum external leakage rates (%)	2.7					
Declared typology	RVU BVU					
Sound power level (dB(A))	50					
The annual electricity consumption (AEC) (kWh/a)	Cold		Average		Warm	
	749		212		167	
The annual heating saved (AHS) (kWh/a)	Cold		Average		Warm	
	8817		4507		2038	

Accessories

Condensation drainage

Name	Photo	Description
SFK 20x32		Hydraulic syphon for condensate drainage

For round ducts

Name	Photo	Description

SD 200/600		Silencers for round ducts
SD 200/900		Silencers for round ducts
SD 200/1200		Silencers for round ducts

For round ducts

Name	Photo	Description
VRV 200		Backdraft dampers with spring for round ducts
VKA 200		Air dampers for round ducts

Electrical heaters

Name	Photo	Description
EVH 200-1.2-1 S21 V.2		Electric duct preheater for heat exchanger freeze protection
EVH 200-1.7-1 S21 V.2		Electric duct preheater for heat exchanger freeze protection
EVH 200-2.0-1 S21 V.2		Electric duct preheater for heat exchanger freeze protection

Control Panels

Name	Photo	Description
S25		LCD control panel
S22		Control panels
S22 Wi-Fi		Control panels

CO2 sensors

Name	Photo	Description
CD-1		CO2 sensors
CD-2		CO2 sensors

Humidity sensors

Name	Photo	Description
FS2		Humidity sensor

Other accessories

Name	Photo	Description
FP 782x128x20 G4		G4 panel filter
FPT 392x236x27 F7		
FPT 392x236x27 G4		

Electric actuators

Name	Photo	Description
Belimo TF230		Electric actuators