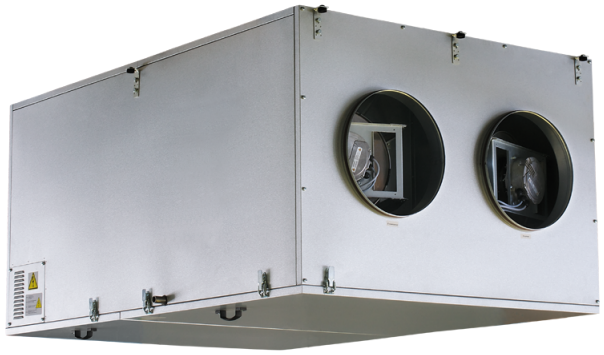

KOMFORT EC DBE 3000 S21 DTV

Suspended heat recovery air handling units

- Power of electrical reheater: 21000
- Heat exchanger type: Cross flow
- Heat exchanger material: Aluminum
- Sound-insulated casing
- Bypass: Auto
- Reheater: Electric
- BMS protocol: ModBus
- Control: Smartphone
- Casing material: Aluzinc
- Humidity sensor: Optional
- CO2 sensor: Optional
- PM2.5 sensor: Optional

	Unit of measurement	KOMFORT EC DBE 3000 S21 DTV
Phases	-	3
Minimum supply voltage	V	400
Maximum supply voltage	V	400
Power supply frequency	Hz	50/60
Power of electrical reheater	W	21000
Maximum airflow	m³/h	4300
Heat recovery efficiency, max	%	72
Heat exchanger type	-	Cross flow
Heat exchanger material	-	Aluminum
Weight	kg	281
Transported air temperature (max)	°C	40
Transported air temperature (min)	°C	-25
Ambient air temperature min	°C	1
Ambient air temperature max	°C	40
Ingress protection rating	-	IP22
Ingress protection rating of the drive	-	IP44
Ambient air humidity max	%	60

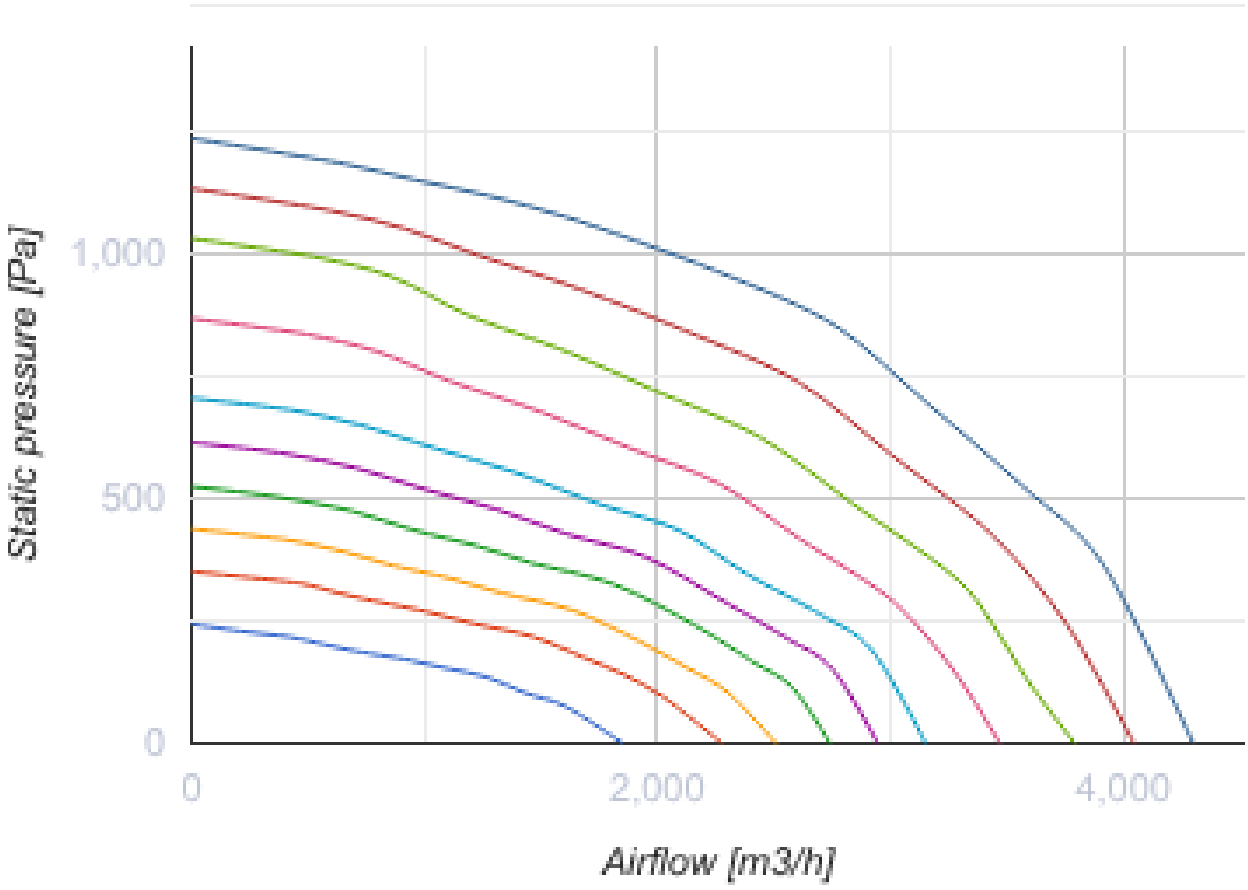
Static pressure [Pa]
1,000
500
0
0
2,000
4,000
Airflow [m3/h]

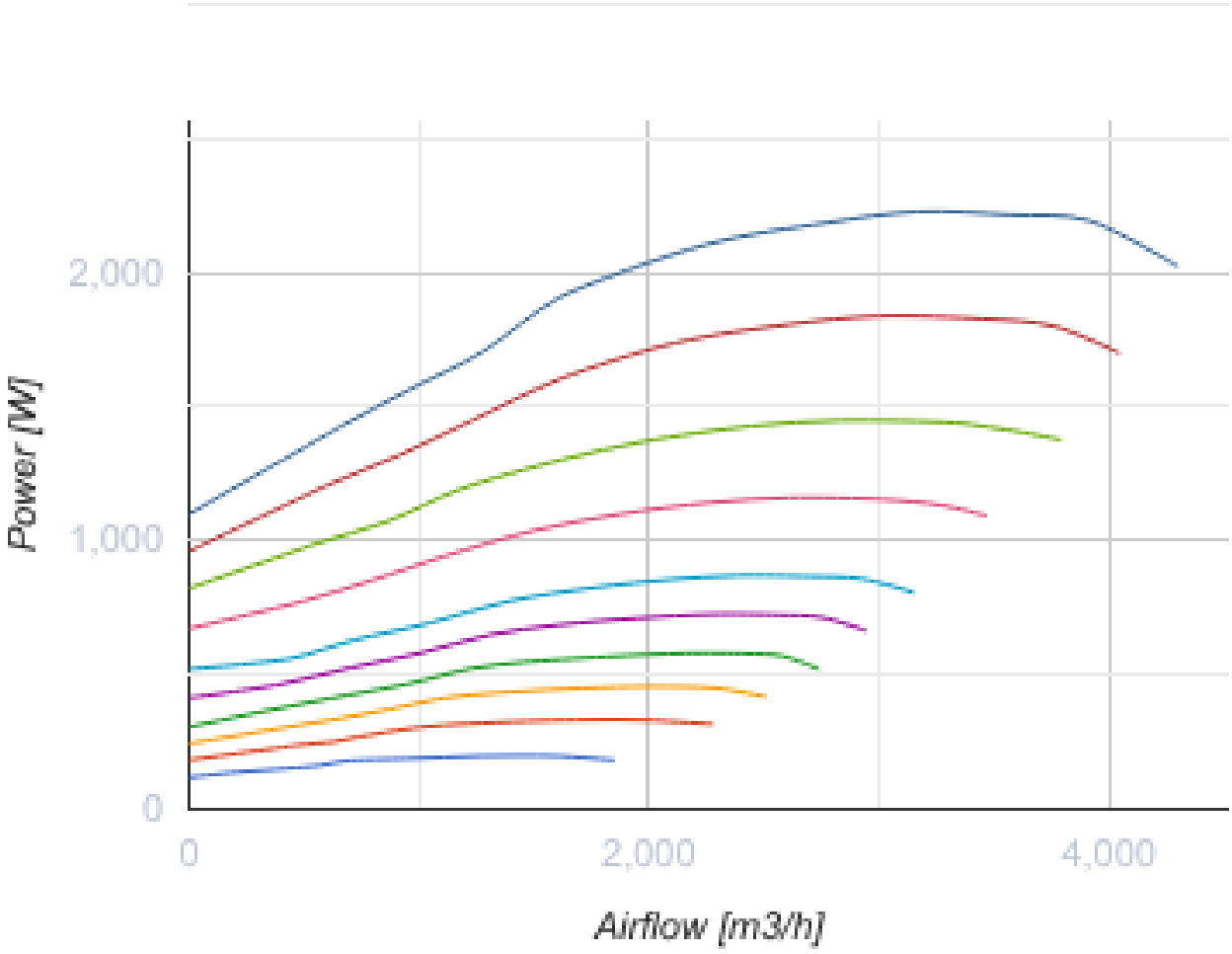

Dimensions

Ø D	B	H	L	L1
400	1265	854	1835	1888

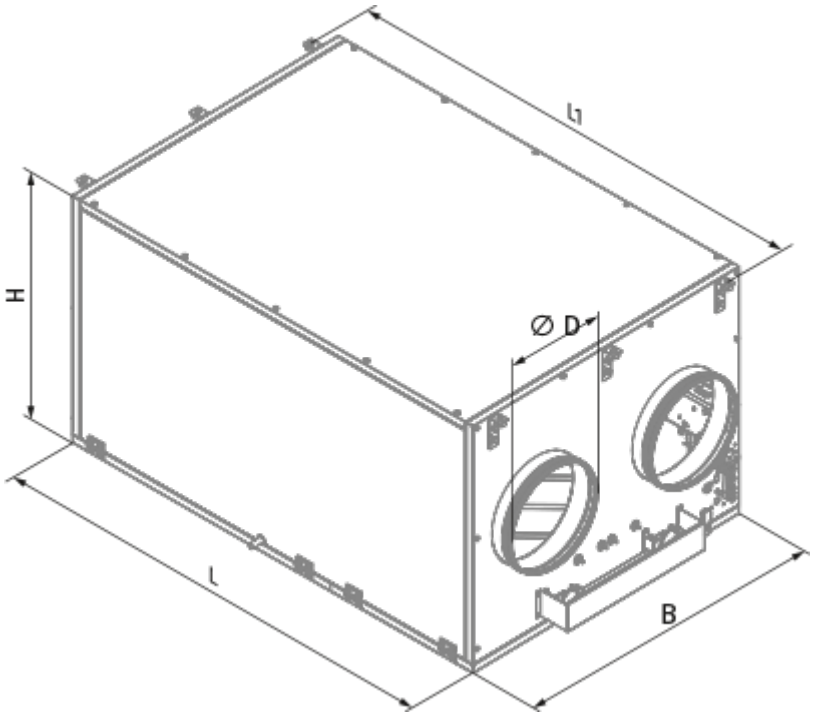

Accessories

Condensation drainage

Name	Photo	Description
SFK 20x32		Hydraulic syphon for condensate drainage

For round ducts

Name	Photo	Description
SD 400/900		Silencers for round ducts
SD 400/1200		Silencers for round ducts

For round ducts

Name	Photo	Description
VKA 400		Air dampers for round ducts

Control Panels

Name	Photo	Description
S25		LCD control panel
S22		Control panels
S22 Wi-Fi		Control panels

CO2 sensors

Name	Photo	Description
CD-1		CO2 sensors
CD-2		CO2 sensors

Humidity sensors

Name	Photo	Description
FS2		Humidity sensor

Other accessories

Name	Photo	Description
FP 827x741x48 G4		G4 panel filter

Electric actuators

Name	Photo	Description
Belimo TF230		Electric actuators