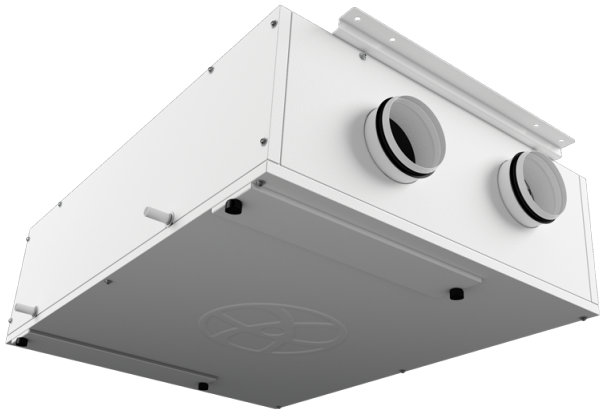

KOMFORT EC DB 160 L S21

Suspended heat recovery air handling units

- Heat exchanger type: Counter flow
- Heat exchanger material: Polystyrene
- Sound-insulated casing
- Bypass: Auto
- Reheater: Optional
- Preheater: Optional
- BMS protocol: ModBus
- Control: Smartphone
- Casing material: Galvanized steel
- Humidity sensor: Optional
- CO2 sensor: Optional
- PM2.5 sensor: Optional

	Unit of measurement	KOMFORT EC DB 160 L S21
Phases	-	1
Minimum supply voltage	V	230
Maximum supply voltage	V	230
Power supply frequency	Hz	50/60
Maximum airflow	m³/h	190
Heat recovery efficiency, max	%	94
Heat exchanger type	-	Counter flow
Heat exchanger material	-	Polystyrene
Weight	kg	48
Transported air temperature (max)	°C	40
Transported air temperature (min)	°C	-25
Ambient air temperature min	°C	1
Ambient air temperature max	°C	40
Ingress protection rating	-	IP22
Ambient air humidity max	%	80
Ingress protection rating of the drive	-	IP44

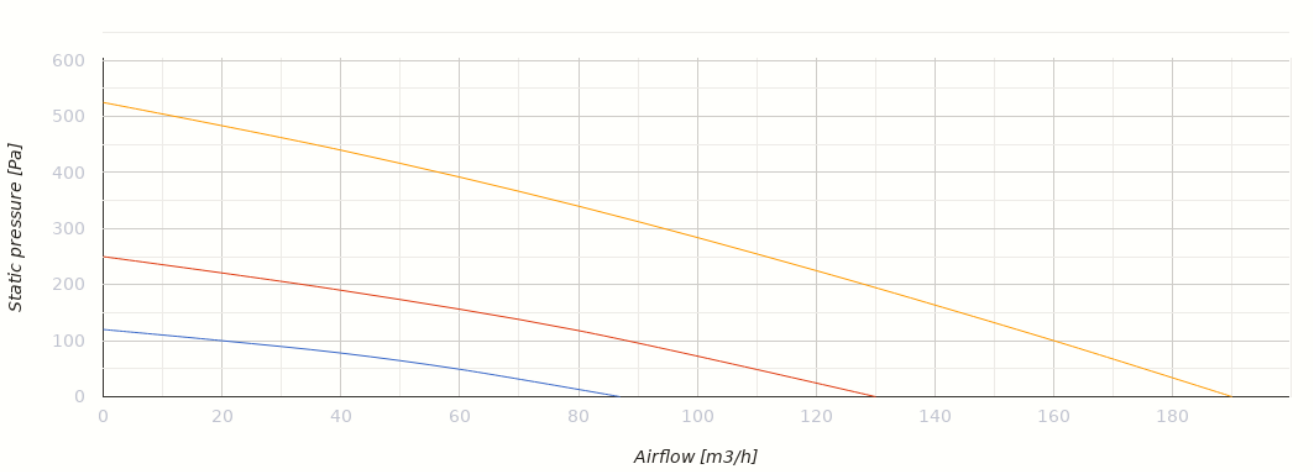

Dimensions

ØD	B	H	H1	L
125	754	320	361	1008

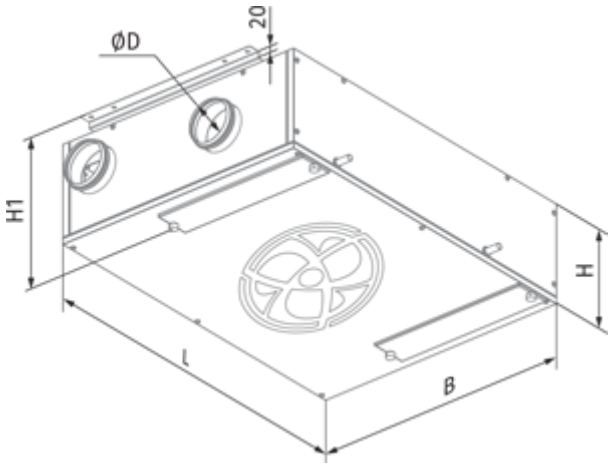

Ecodesign

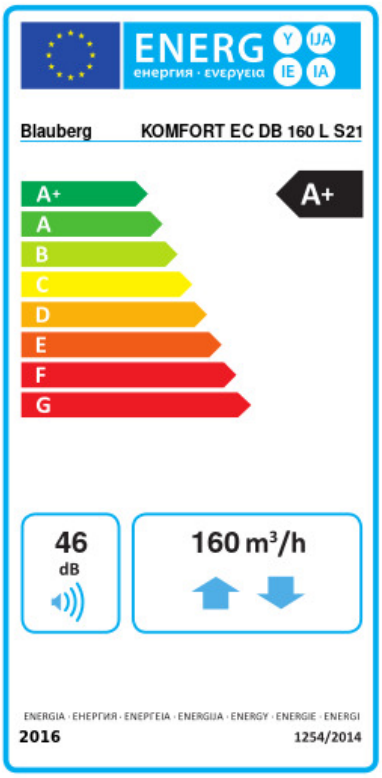

Trademark	Blauberg					
Model	KOMFORT EC DB 160 L S21					
Specific energy consumption (SEC) (kWh/(m²/a))	Cold		Average		Warm	
	-80.9	A+	-42.5	A+	-16.7	E
Type of ventilation unit	Bidirectional					
Type of drive installed	Variable speed					
Type of heat recovery system	Recuperative					
Thermal efficiency of heat recovery (%)	84					
Maximum flow rate (m³/h)	160					
Electric power input (W)	52					
Reference flow rate (m³/s)	0.035					
Reference pressure difference (Pa)	50					
Specific power input (SPI) (W/(m³/h))	0.205					
Control typology	Local demand control					
Maximum internal leakage rates (%)	2.7					
Maximum external leakage rates (%)	2.7					
Declared typology	RVU BVU					
Sound power level (dB(A))	46					
The annual electricity consumption (AEC) (kWh/a)	Cold		Average		Warm	
	690		153		108	
The annual heating saved (AHS) (kWh/a)	Cold		Average		Warm	
	8408		4298		1944	

Accessories

Condensation drainage

Name	Photo	Description
SFK 20x32		Hydraulic syphon for condensate drainage

For round ducts

Name	Photo	Description

SD 125/600		Silencers for round ducts
SD 125/900		Silencers for round ducts
SD 125/1200		Silencers for round ducts

For round ducts

Name	Photo	Description
VKA 125		Air dampers for round ducts

Electrical heaters

Name	Photo	Description
EVH 125-0.6-1 S21 V.2		Electric duct preheater for heat exchanger freeze protection
EVH 125-0.8-1 S21 V.2		Electric duct preheater for heat exchanger freeze protection
EVH 125-1.2-1 S21 V.2		Electric duct preheater for heat exchanger freeze protection
ENH 125-0.6-1 S21 V.2		Duct heater for supply air reheating
ENH 125-0.8-1 S21 V.2		Duct heater for supply air reheating
ENH 125-1.2-1 S21 V.2		Duct heater for supply air reheating

Control Panels

Name	Photo	Description
S25		LCD control panel

S22		Control panels
S22 Wi-Fi		Control panels

CO2 sensors

Name	Photo	Description
CD-1		CO2 sensors
CD-2		CO2 sensors

Humidity sensors

Name	Photo	Description
FS2		Humidity sensor

Other accessories

Name	Photo	Description
FP 403x253x48 F7		F7 panel filter
FP 403x253x48 G4		G4 panel filter

Electric actuators

Name	Photo	Description
Belimo TF230		Electric actuators