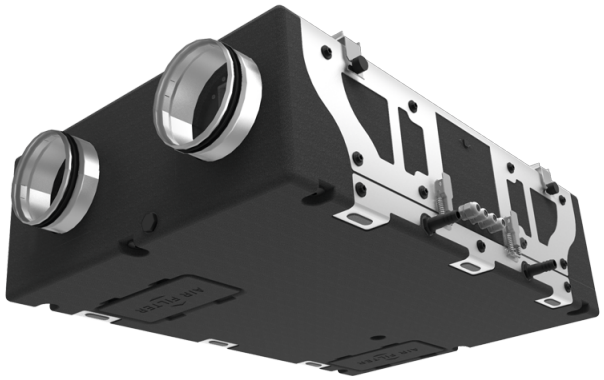

KOMFORT EC D5B 180 S21

Heat and energy recovery air handling units

- Heat exchanger type: Counter flow
- Heat exchanger material: Polystyrene
- Sound-insulated casing
- Bypass: Auto
- Reheater: Optional
- Preheater: Optional
- BMS protocol: ModBus
- Control: Smartphone
- Casing material: EPP
- Humidity sensor: Optional
- CO2 sensor: Optional
- PM2.5 sensor: Optional

	Unit of measurement	KOMFORT EC D5B 180 S21
Phases	-	1
Minimum supply voltage	V	230
Maximum supply voltage	V	230
Power supply frequency	Hz	50/60
Maximum airflow	m³/h	220
Heat recovery efficiency, max	%	98
Heat exchanger type	-	Counter flow
Heat exchanger material	-	Polystyrene
Weight	kg	14
Transported air temperature (max)	°C	40
Transported air temperature (min)	°C	-25
Ambient air temperature min	°C	1
Ambient air temperature max	°C	40
Ingress protection rating	-	IP22
Ambient air humidity max	%	60
Ingress protection rating of the drive	-	IP44

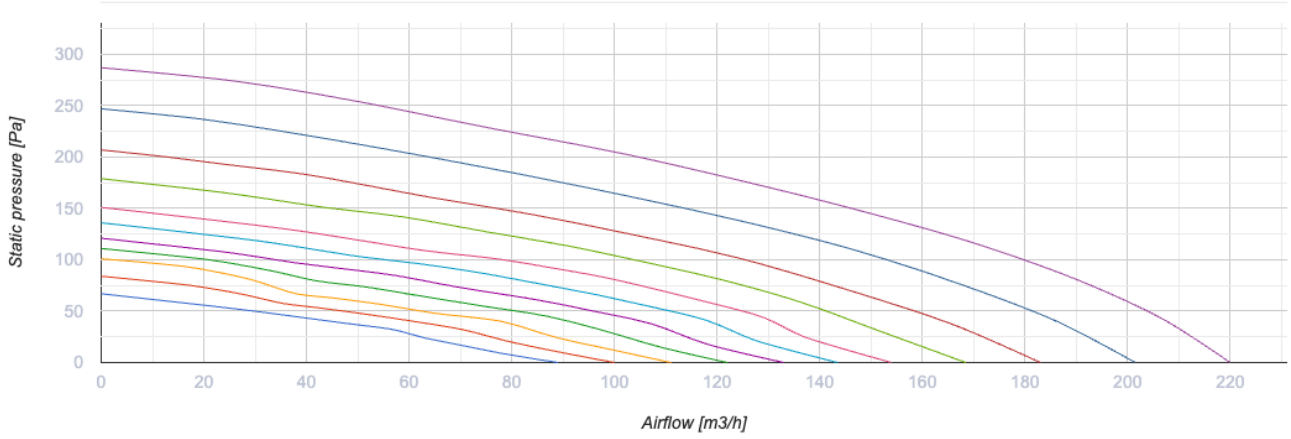

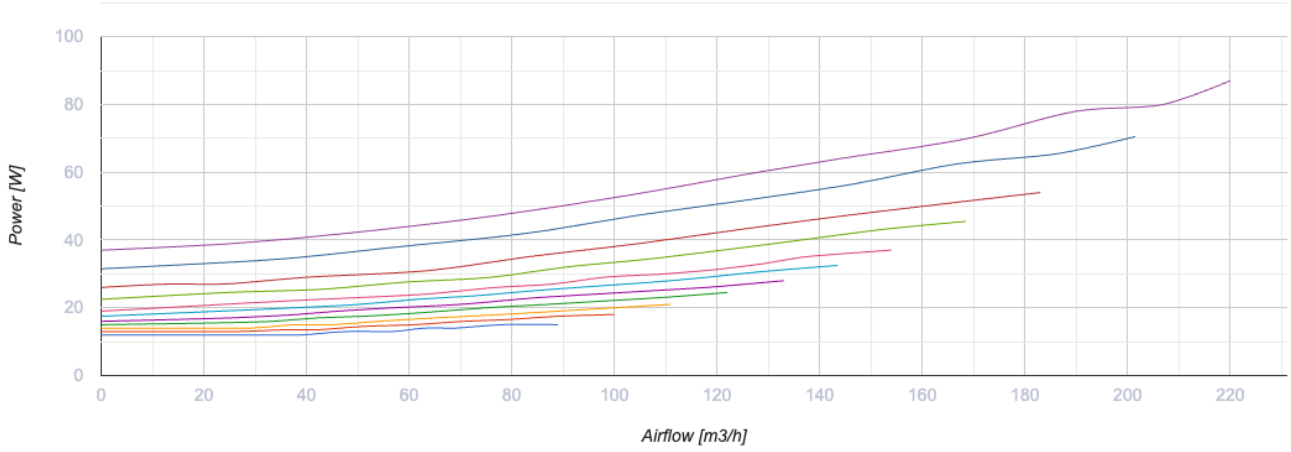

Dimensions

Ø D	Ø D1	B	B1	B2	B3	L	L1	L2	H	H1	H2
150	19	650	600	326	163	900	1009	302	264	110	38

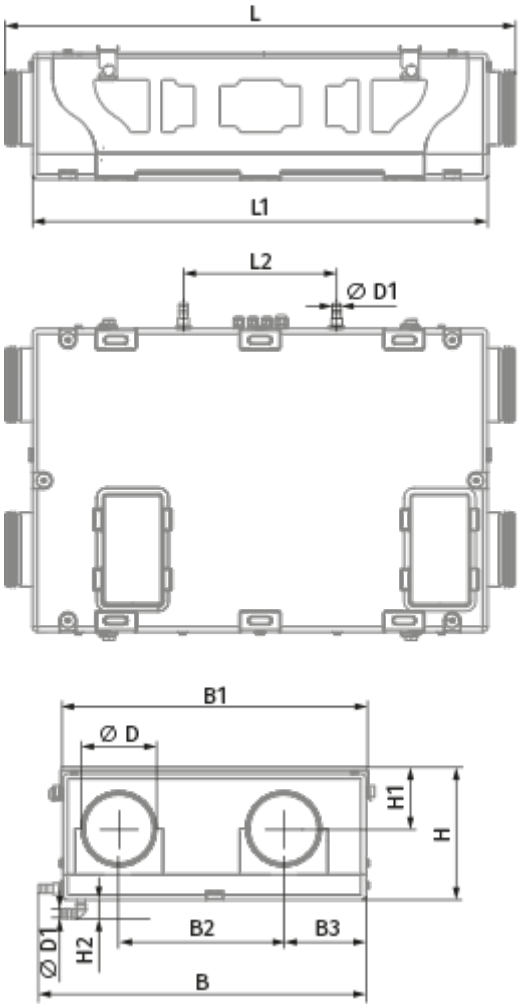

Accessories

Condensation drainage

Name	Photo	Description
SFK 20x32		Hydraulic syphon for condensate drainage

For round ducts

Name	Photo	Description
SD 150/600		Silencers for round ducts
SD 150/900		Silencers for round ducts

SD 150/1200		Silencers for round ducts

For round ducts

Name	Photo	Description
VKA 150		Air dampers for round ducts

Electrical heaters

Name	Photo	Description
EVH 150-0.8-1 S21 V.2		Electric duct preheater for heat exchanger freeze protection
EVH 150-1.2-1 S21 V.2		Electric duct preheater for heat exchanger freeze protection
EVH 150-1.7-1 S21 V.2		Electric duct preheater for heat exchanger freeze protection
EVH 150-2.0-1 S21 V.2		Electric duct preheater for heat exchanger freeze protection
ENH 150-0.8-1 S21 V.2		Duct heater for supply air reheating
ENH 150-1.2-1 S21 V.2		Duct heater for supply air reheating
ENH 150-1.7-1 S21 V.2		Duct heater for supply air reheating
ENH 150-2.0-1 S21 V.2		Duct heater for supply air reheating

Control Panels

Name	Photo	Description
S25		LCD control panel

S22		Control panels
S22 Wi-Fi		Control panels

CO2 sensors

Name	Photo	Description
CD-1		CO2 sensors
CD-2		CO2 sensors

Humidity sensors

Name	Photo	Description
FS2		Humidity sensor

Other accessories

Name	Photo	Description
FP 214x186x48 F7		F7 panel filter
FP 214x186x18 G4		G4 panel filter