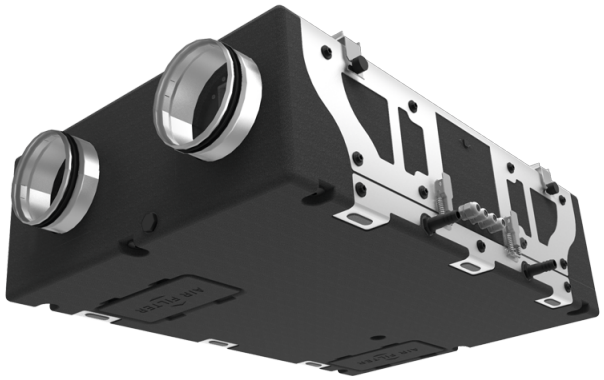

# KOMFORT EC D5B 180-E S14

Heat and energy recovery air handling units

- Heat exchanger type: Counter flow
- Heat exchanger material: Enthalpy
- Sound-insulated casing
- Enthalpy heat exchanger
- Bypass: Manual
- Control: Wired control panel
- Casing material: EPP
- Installation in any position
- Humidity sensor: Optional
- CO2 sensor: Optional

| | Unit of measurement | KOMFORT EC D5B 180-E S14 |
|---|---|---|
| Phases | - | 1 |
| Minimum supply voltage | V | 230 |
| Maximum supply voltage | V | 230 |
| Power supply frequency | Hz | 50/60 |
| Maximum airflow | m³/h | 220 |
| Heat recovery efficiency, max | % | 94 |
| Heat exchanger type | - | Counter flow |
| Heat exchanger material | - | Enthalpy |
| Weight | kg | 14 |
| Transported air temperature (max) | °C | 40 |
| Transported air temperature (min) | °C | -25 |
| Ambient air temperature min | °C | 1 |
| Ambient air temperature max | °C | 40 |
| Ingress protection rating | - | IP22 |
| Ingress protection rating of the drive | - | IP44 |
| Ambient air humidity max | % | 60 |

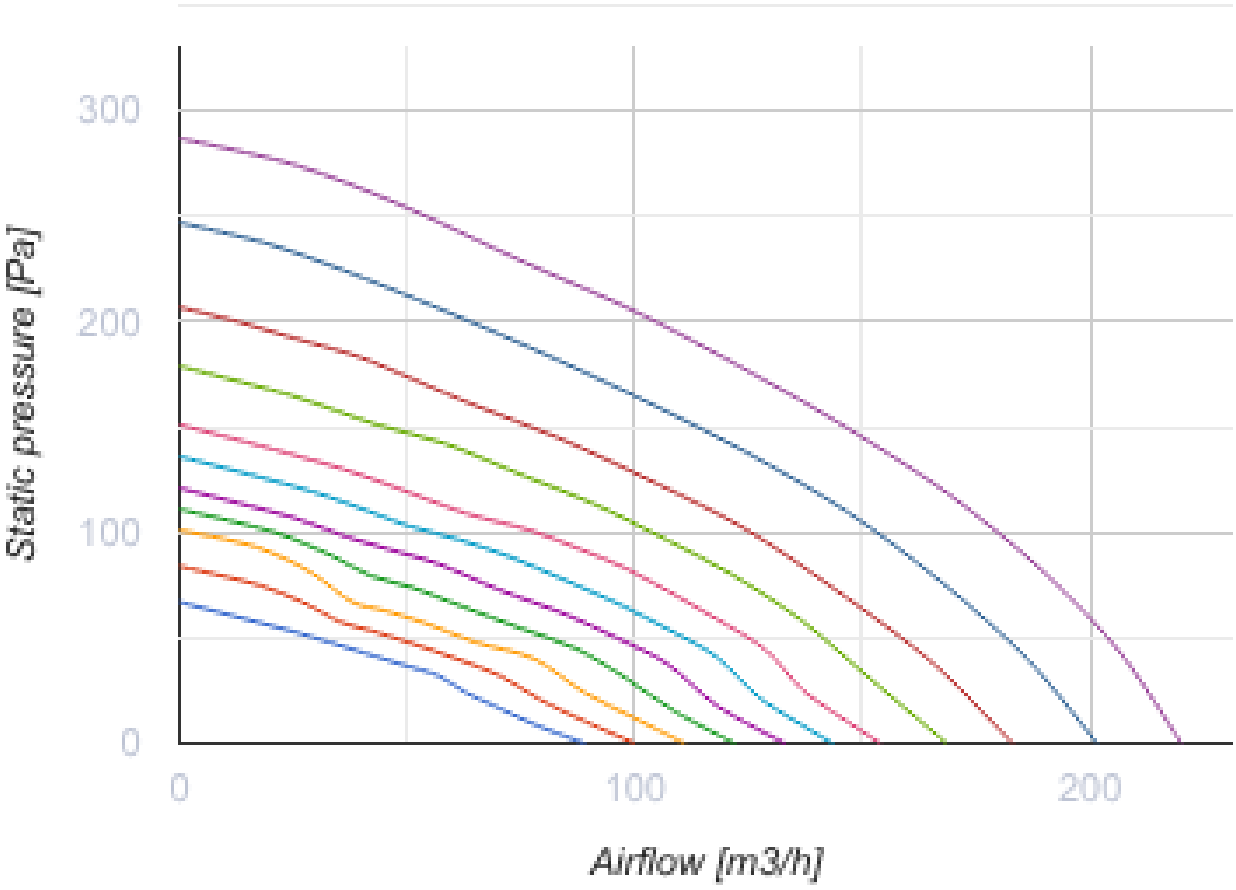
300
200
100
0
Static pressure [Pa]
0
100
200
Airflow [m3/h]

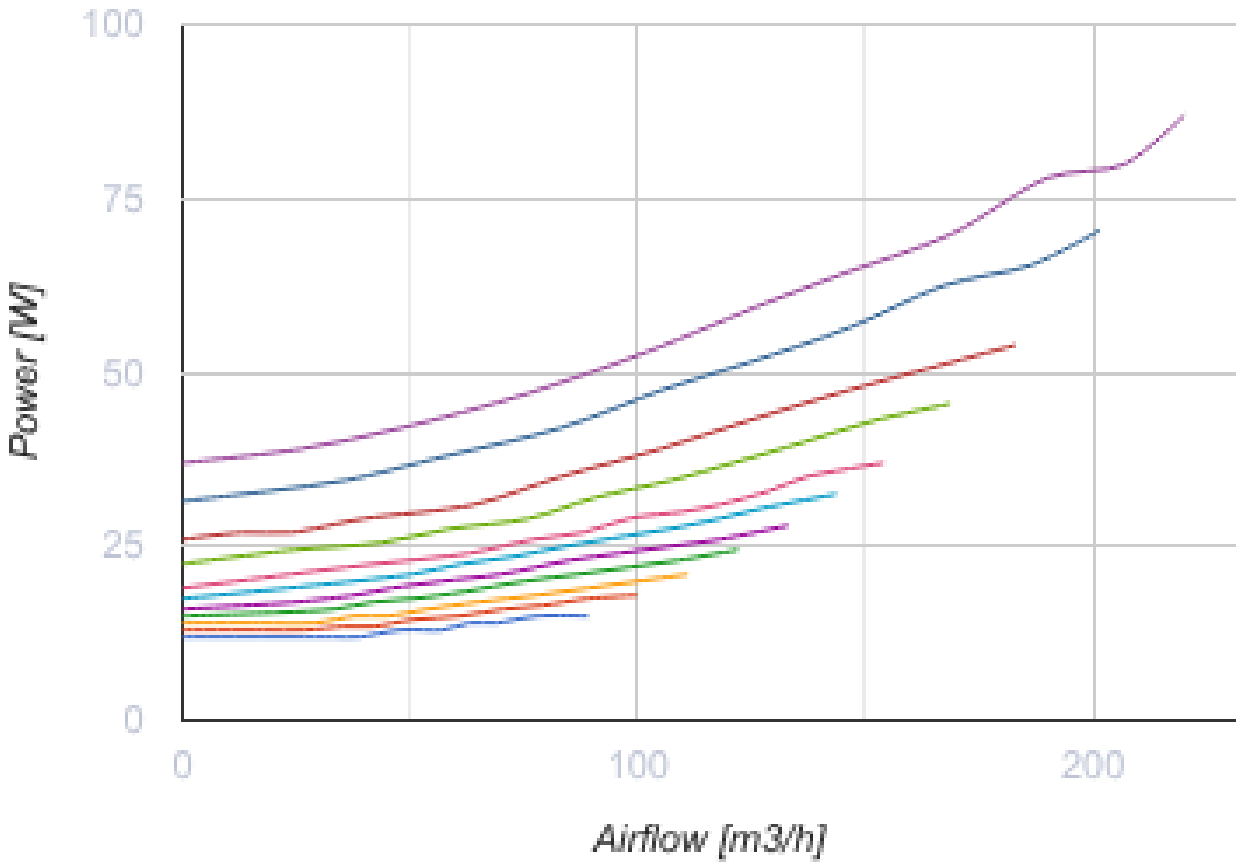


## Dimensions

| Ø D | Ø D1 | B | B1 | B2 | B3 | L | L1 | L2 | H | H1 | H2 |
|---|---|---|---|---|---|---|---|---|---|---|---|
| 150 | – | 650 | 600 | 326 | 163 | 900 | 1009 | 302 | 264 | 110 | – |

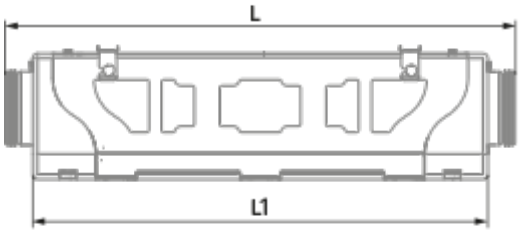
L
L1

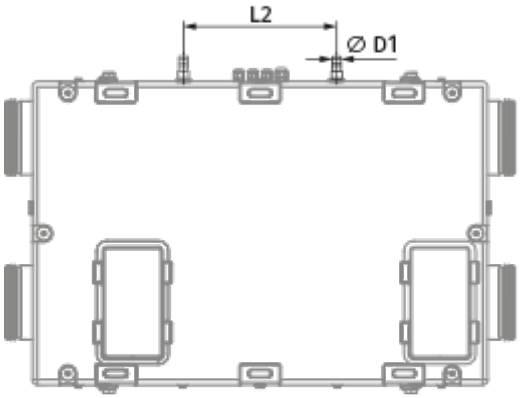
L2
Ø D1

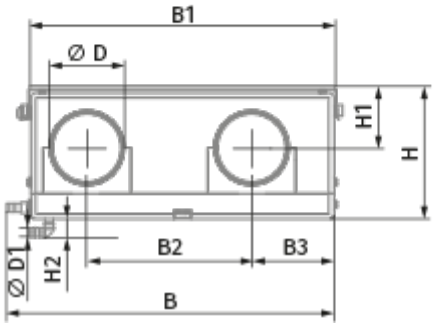
B1
Ø D
H1
H
Ø D1
H2
B2
B3
B

## Ecodesign

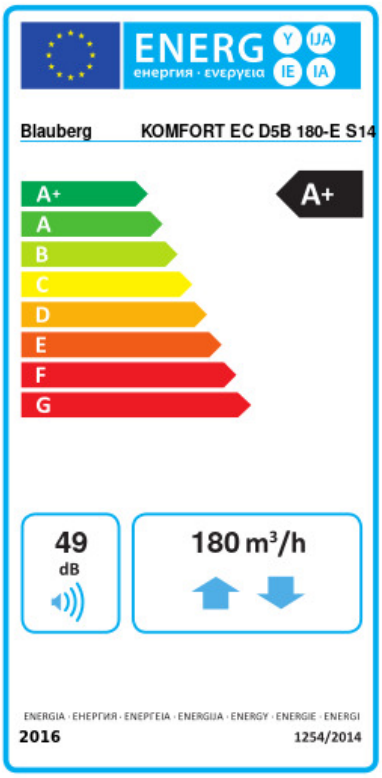


| | | | | | | |
|---|---|---|---|---|---|---|
| Trademark | Blauberg | | | | | |
| Model | KOMFORT EC D5B 180-E S14 | | | | | |
| Specific energy consumption (SEC) (kWh/(m²/a)) | Cold | | Average | | Warm | |
| | 0 | A+ | 0 | A+ | 0 | E |
| Type of ventilation unit | Bidirectional | | | | | |
| Type of drive installed | Variable speed | | | | | |
| Type of heat recovery system | Recuperative | | | | | |
| Thermal efficiency of heat recovery (%) | 0 | | | | | |
| Maximum flow rate (m³/h) | 0 | | | | | |
| Electric power input (W) | 0 | | | | | |
| Reference flow rate (m³/s) | 0 | | | | | |
| Reference pressure difference (Pa) | 0 | | | | | |
| Specific power input (SPI) (W/(m³/h)) | 0 | | | | | |
| Control typology | Local demand control | | | | | |
| Maximum internal leakage rates (%) | 0 | | | | | |
| Maximum external leakage rates (%) | 0 | | | | | |
| Declared typology | RVU BVU | | | | | |
| Sound power level (dB(A)) | 0 | | | | | |
| The annual electricity consumption (AEC) (kWh/a) | Cold | | Average | | Warm | |
| | 0 | | 0 | | 0 | |
| The annual heating saved (AHS) (kWh/a) | Cold | | Average | | Warm | |
| | 0 | | 0 | | 0 | |

## Accessories

### For round ducts

| Name | Photo | Description |
|---|---|---|
| SD 150/600 |  | Silencers for round ducts |
| SD 150/900 |  | Silencers for round ducts |

| | | |
|---|---|---|
| SD 150/1200 |  | Silencers for round ducts |

### For round ducts

| Name | Photo | Description |
|---|---|---|
| VKA 150 |  | Air dampers for round ducts |

### CO2 sensors

| Name | Photo | Description |
|---|---|---|
| CD-1 |  | CO2 sensors |
| CD-2 |  | CO2 sensors |

### Humidity sensors

| Name | Photo | Description |
|---|---|---|
| FS2 |  | Humidity sensor |

### Other accessories

| Name | Photo | Description |
|---|---|---|
| FP 214x186x48 F7 |  | F7 panel filter |
| FP 214x186x18 G4 |  | G4 panel filter |