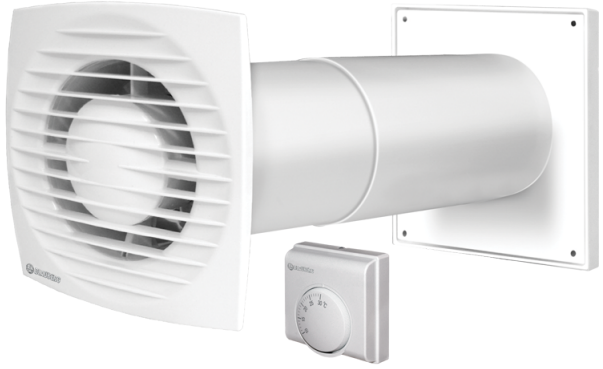

KIT Bravo-BW 100/40-2

Heat movers

	Unit of measurement	KIT Bravo-BW 100/40-2

Dimensions

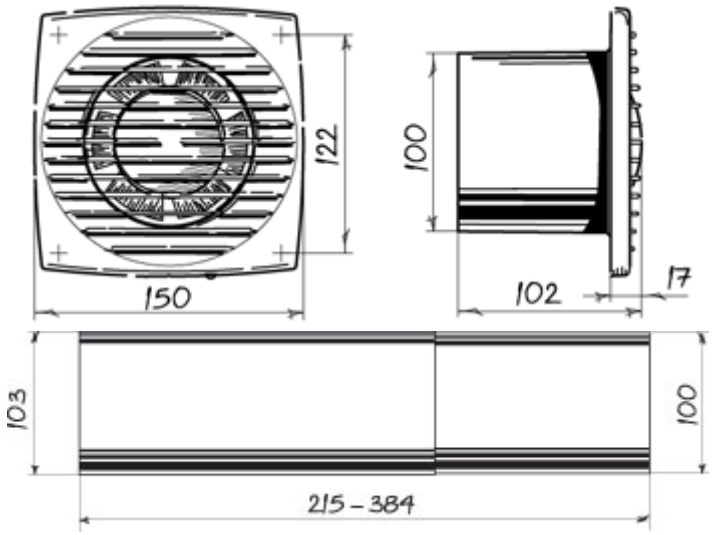

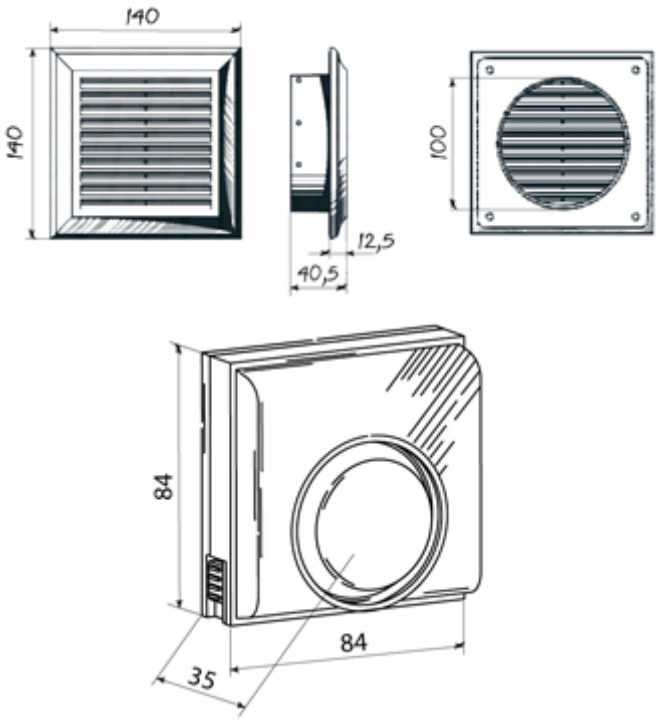
140
140
12,5
40,5
100
84
84
35