

KIT Aero-BW 100/40-1

Heat movers

	Unit of measurement	KIT Aero-BW 100/40-1

Dimensions

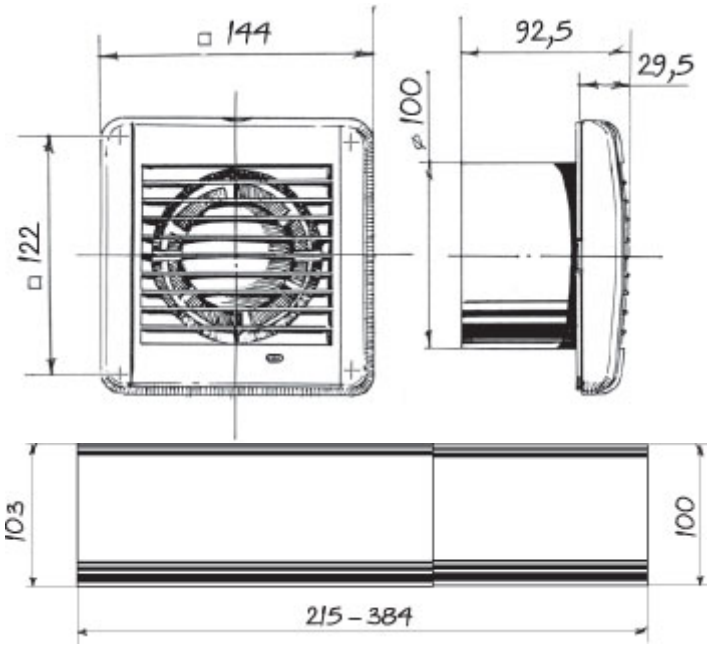

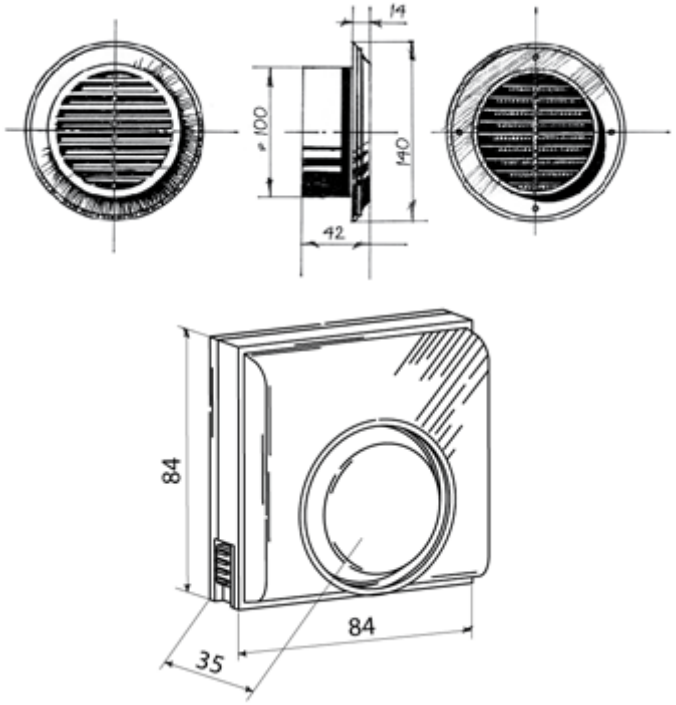
14
ø 100
140
42
84
84
35