

KFK 50x25-3

Duct DX cooling units for rectangular air ducts

- Casing material: Galvanized steel

	Unit of measurement	KFK 50x25-3
Weight	kg	12.8

Dimensions

ØD1	ØD2	B	B1	B2	H	H1	H2	L
12	22	500	540	570	250	345	155	44

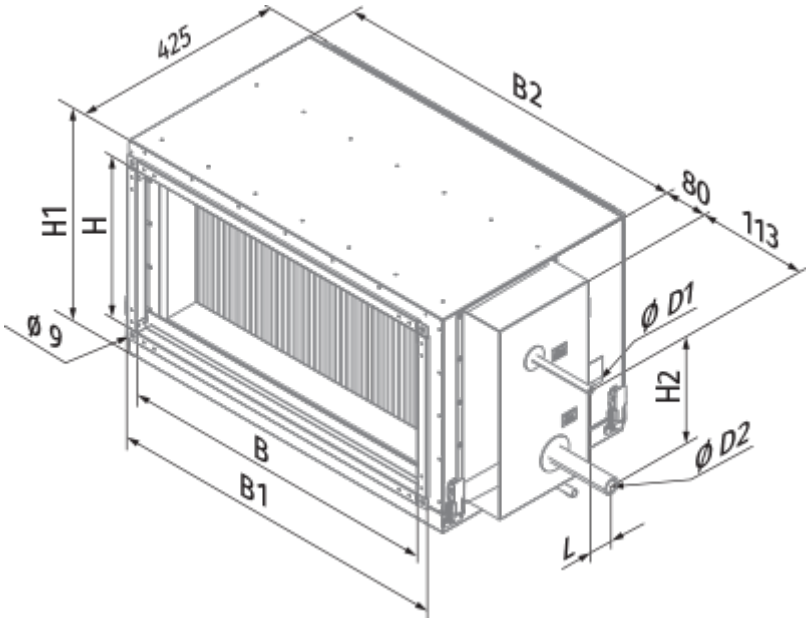
425
B2
80
113
H1
H
Ø 9
Ø D1
H2
Ø D2
B
B1
L